SUMMIT

FF41SSADA

32.5" x 18.75" x 20.25" (H x W x D)

DISCONTINUED: Replaced by FF41ESSSADA

Highlights:

ADA compliant 32 inch height

Compact dimensions fit easily in any setting

Automatic defrost saves on user maintenance

Product Features:

ADA compliant	32 inch height fits under standard ADA counters
Slim counterheight dimensions	Less than 20 inches wide to fit tight spots
Automatic defrost	Simplify maintenance by letting the appliance defrost itself
Stainless steel door	Durable design with lasting elegance
Adjustable thermostat	Manage the interior temperature with ease and accuracy
Door storage	Keep large bottles and condiments right on the door for easy access
Fruit and vegetable crisper	Get the longest life and best taste out of produce by storing greens in a convenient slide drawer
Adjustable shelves	Rearrange your refrigerator space to accommodate all shapes and sizes or remove shelves for a simple clean-up
100% CFC free	Environmentally friendly design without ozone-damaging chemica

SUMMIT

FF41SSADA Specifications:
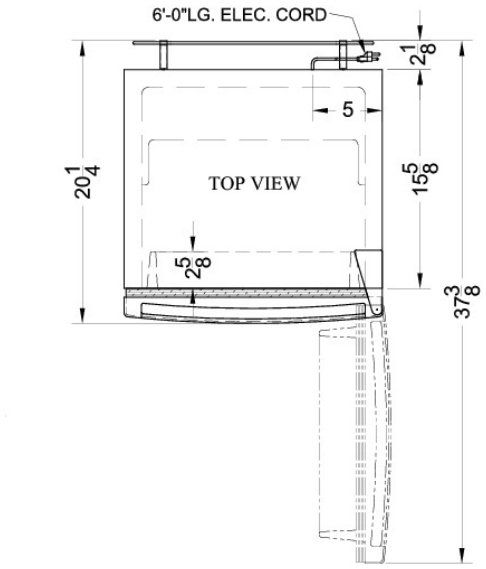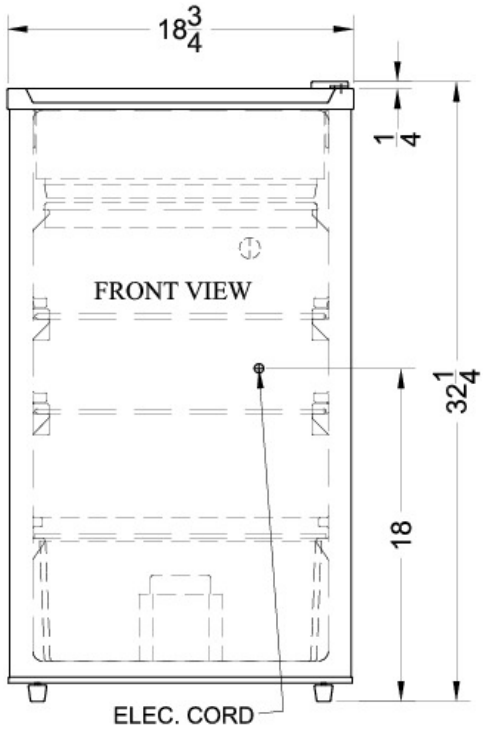
Overview	
Height of Cabinet	32.0" (81 cm)
Height to Hinge Cap	32.5" (83 cm)
Width	18.75" (48 cm)
Depth	20.25" (51 cm)
Depth with Handle	20.25" (51 cm)
Depth with door at 90°	37.38" (95 cm)
Capacity	3.6 cu.ft. (102 L)
Defrost Type	Automatic
Door	Stainless Steel
Cabinet	White
US Electrical Safety	UL
Canadian Electrical Safety	ULC
Energy Usage/Year	371.0kWh/year
Amps	0.8
Voltage/Frequency	115 V AC/60 Hz
Shipping Weight	98.0 lbs. (44 kg)
Parts & Labor Warranty	1 Year
Compressor Warranty	5 Years
Refrigerator-Freezer	
Door Swing	RHD
Reversible	Factory Reversible
Adjustable Shelves	Yes
Crisper Qty	1
Crisper Finish	Transparent
Crisper Cover	Glass
Interior Light	Yes
Refrigerator - Shelf Type	Wire
Refrigerator - Shelf Qty	2
Refrigerator - Full Door Shelves	3
Thermostat Type	Dial
Fan Type	Exterior
Refrigerant Type	R134a
High Side PSI	235.0
Low Side PSI	140.0
Level Legs	2