FF708BLSSRS

33.5" x 23.63" x 22.38" (H x W x D)

24" wide residential ENERGY STAR certified 5.3 cu.ft. counter height all-refrigerator for recessed use, made in Europe with automatic defrost operation, reversible stainless steel door, and deluxe black interior

Highlights:

ENERGY STAR certified for guaranteed savings and a greener footprint

Made in Europe

Full 5.3 cu.ft. capacity inside a convenient 24" footprint

Product Features:

24" wide European all-refrigerator	Freezerless refrigerator designed and manufactured in Europe for residential use
ENERGY STAR certified	Rated by the DOE to perform with more efficiency than federal standards require, saving your unit energy and you on higher utility costs
Large capacity	5.3 cu.ft. interior offers more storage space than units in this size class
Slim counter height dimensions for recessed or freestanding use	Ideal 24" footprint for an easy fit
Height adjustable	Adjustable legs allow you to set the height anywhere between 33.5" and 34.5" to best fit under your counter
Leg shield included	Removable cover that lets you fill the gap that can appear between the refrigerator's kickplate and floor when raising the height
Automatic defrost	No-frost operation for minimum user maintenance
Adjustable glass shelves	Rearrange your refrigerator space to accommodate all shapes and sizes or remove shelves for a simple clean-up
Bottle shelf included	Removable scalloped steel shelf lets you keep wine and other bottles stored horizontally

SUMMIT APPLIANCE DIVISION, FELIX STORCH, INC. | ISO 9001:2015 Certified
770 Garrison Avenue Bronx, NY 10474 USA **TEL** 718-893-3900 **FAX** 844-478-8799 info@summitappliance.com **www.summitappliance.com**

SUMMIT

FF708BLSSRS Specifications:

Overview	
Height of Cabinet	33.13" (84 cm)
Height to Hinge Cap	33.5" (85 cm)
Width	23.63" (60 cm)
Depth	22.38" (57 cm)
Depth with Handle	24.0" (61 cm)
Depth with door at 90°	44.25" (112 cm)
Capacity	5.3 cu.ft. (150 L)
Defrost Type	Automatic
Door	Stainless Steel
Cabinet	Black
US Electrical Safety	ETL
Canadian Electrical Safety	ETL-C
Energy Usage/Year	276.0kWh/year
Amps	0.8
Voltage/Frequency	115 V AC/60 Hz
Weight	100.0 lbs. (45 kg)
Shipping Weight	115.5 lbs. (52 kg)
Parts & Labor Warranty	1 Year
Compressor Warranty	5 Years
UPC	761101103068
Refrigerator Features	
Door Swing	RHD
Reversible	Yes
Height Adjustable	Yes
Crisper Qty	1
Crisper Finish	Transparent
Crisper Cover	Glass
Shelf Type	Glass and Scalloped
Shelf Qty	3
Adjustable Shelves	Yes
Wine Bottle Shelves	Yes
Thermostat Type	Dial
Refrigerant Type	R600a
Refrigerant Amount	0.64oz.
Level Legs Qty	2
Interior Light	Yes
Temperature Range	36 to 46°F

Sound Level	32.6 dBa
Dimensions	
Interior Height	27.75" (70 cm)
Interior Width	21.0" (53 cm)
Interior Depth	18.0" (46 cm)
Compressor Step Height	5.5" (14 cm)
Compressor Step Width	21.0" (53 cm)
Compressor Step Depth	6.0" (15 cm)

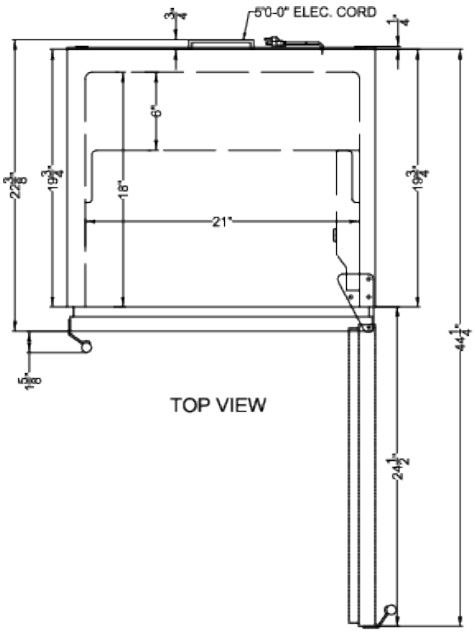

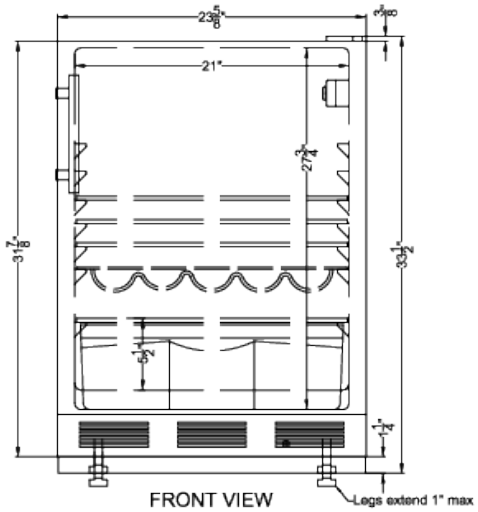

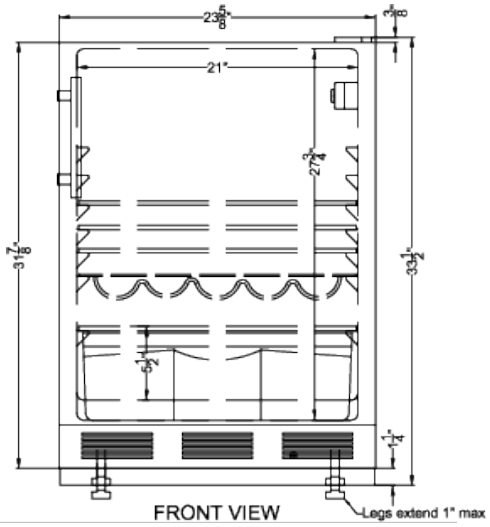

SUMMIT APPLIANCE DIVISION, FELIX STORCH, INC. | ISO 9001:2015 Certified
770 Garrison Avenue Bronx, NY 10474 USA **TEL** 718-893-3900 **FAX** 844-478-8799 info@summitappliance.com **www.summitappliance.com**