SUMMIT

COOL1D

11.88" x 17.88" x 20.63" (H x W x D)

18" wide single drawer wine/beverage cooler for built-in use with panel-ready stainless steel drawer front

Highlights:

Flexible design allows built-in or freestanding use in 18" wide spaces

Solid state operation for a quiet performance

Panel-ready drawer allows you to create a truly custom look for your space

Product Features:

18" wide single drawer cooler	Slim fit allows you to elevate extra undercounter or wall space
Quiet operation	Solid state cooling eliminates the typical noises and vibrations produced by compressor-based coolers
Built-in capable	Designed for installation in 12" H x 18" W x 22.5" D cutouts with cross ventilation in rear
Panel-ready	Drawer accepts an overlay panel to let you seamlessly blend the unit into an existing cabinetry design (panel dimensions: 11.9" H x 17.87" W at 3/4" thickness)
304 grade stainless steel drawer	Drawer front and interior constructed from stainless steel for added durability and easy cleanability
Digital thermostat	Electronic controls located on the top drawer ensure easy temperature management, with an external readout of Celsius or Fahrenheit
Perfect chilling temperature	Designed to operate between 46 and 68ºF for the ideal storage of wine, beverages, and certain cosmetics
Removable wine shelves	Two molded plastic racks included to store Bordeaux style and other bottles at a slight angle
Open wine bottle storage	Thoughtfully designed shelving allows you to store up to 4 bottles at a 45º angle, perfect for chilling open bottles without in spill-proof style

SUMMIT

COOL1D Specifications:

Overview	
Height of Cabinet	11.88" (30 cm)
Width	17.88" (45 cm)
Depth	20.63" (52 cm)
Depth with Handle	22.5" (57 cm)
Capacity	0.8 cu.ft. (23 L)
Bottles	8 bottles
Defrost Type	Frost-Free
Door	Stainless Steel/Panel-Ready
Cabinet	Black
US Electrical Safety	ETL
Canadian Electrical Safety	ETL-C
Amps	1.0
Voltage/Frequency	115 V AC/60 Hz
Weight	62.0 lbs. (28 kg)
Parts & Labor Warranty	1 Year
UPC	761101088945
Wine Cellar	
Number of Zones	1
Door Swing	Drawer
Adjustable Shelves	Yes
Shelf Type	Plastic
Shelf Qty	2
Thermostat Type	Digital
Interior Light	Yes
Fan Type	Exterior
Interior Height 1	7.0" (18 cm)
Interior Width 1	13.63" (35 cm)
Interior Depth 1	12.25" (31 cm)
Level Legs	2
Temperature Range	46 to 68ºF
Sabbath Mode	Yes

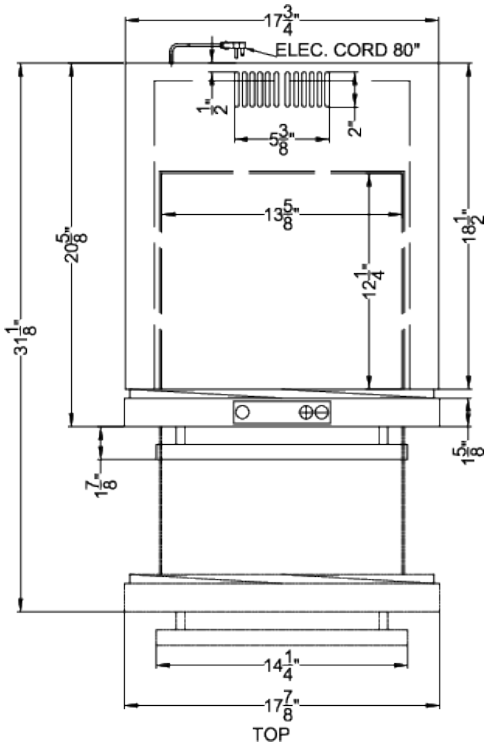

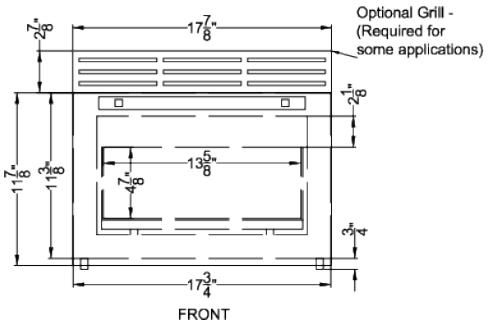

SUMMIT APPLIANCE DIVISION, FELIX STORCH, INC. | ISO 9001:2015 Certified
770 Garrison Avenue Bronx, NY 10474 USA **TEL** 718-893-3900 **FAX** 844-478-8799 info@summitappliance.com **www.summitappliance.com**