FF6BK7BZLHD

33" x 23.63" x 22.75" (H x W x D)

24" wide European solid door commercial beverage zone all-refrigerator in black exterior finish with stainless steel towel bar handle and left hand door swing

Highlights:

Commercially approved for use in foodservice establishments

Made in Europe

Easy-to-grip towel bar handle mounted on a stainless steel bumper for lasting durability in busy commercial settings

Product Features:

Counter height commercial all-refrigerator	24 inch wide European refrigerator with a generous 5.5 cu.ft. interior capacity
Commercially approved	ETL-S listed to NSF-7 commercial standards for use in bars, restaurants, and other foodservice environments
Made in Europe	European construction with a classic design that's been the industry standard for over 30 years
Stainless steel towel bar handle	Curved handle in brushed stainless steel offers an easy grip, ideal for servers in busy commercial settings
Stainless steel corner guard	Handle is mounted over a 304 grade stainless steel bumper to help protect the door
24 inch footprint	Perfectly sized and designed for freestanding or recessed installation in commercial settings
Adjustable glass shelves	Spill-proof glass shelves offer cleaner storage with convenient adjustability to best accommodate your storage
Door storage	Two door racks let you keep bottles and cans in easy reach for busy servers
Removable crisper drawer	Lower slide-out drawer offers additional storage, or remove to hold taller bottles as needed

SUMMIT APPLIANCE DIVISION, FELIX STORCH, INC. | ISO 9001:2015 Certified
770 Garrison Avenue Bronx, NY 10474 USA **TEL** 718-893-3900 **FAX** 844-478-8799 info@summitappliance.com **www.summitappliance.com**

FF6BK7BZLHD Specifications:

Overview	
Height of Cabinet	32.63" (83 cm)
Height to Hinge Cap	33.0" (84 cm)
Width	23.63" (60 cm)
Depth	22.75" (58 cm)
Depth with Handle	25.25" (64 cm)
Depth with door at 90°	45.0" (114 cm)
Capacity	5.5 cu.ft. (156 L)
Defrost Type	Automatic
Door	Black
Cabinet	Black
US Electrical Safety	ETL
Canadian Electrical Safety	ETL-C
Sanitation	ETL-S
Amps	1.4
Voltage/Frequency	115 V AC/60 Hz
Weight	100.0 lbs. (45 kg)
Parts & Labor Warranty	1 Year
Compressor Warranty	5 Years
UPC	761101089799
Refrigerator Features	
Door Swing	LHD
Reversible	Factory Reversible
Crisper Qty	1
Crisper Finish	Opaque
Crisper Cover	Glass
Shelf Type	Glass
Shelf Qty	3
Full Door Shelf Qty	3
Adjustable Shelves	Yes
Thermostat Type	Dial
Refrigerant Type	R600a
Refrigerant Amount	0.64oz.
High Side PSI	180.0
Low Side PSI	80.0
Level Legs Qty	4
Interior Light	Yes
Dimensions	

Interior Height	26.0" (66 cm)
Interior Width	21.0" (53 cm)
Interior Depth	17.75" (45 cm)
Compressor Step Height	6.75" (17 cm)
Compressor Step Width	21.0" (53 cm)
Compressor Step Depth	6.0" (15 cm)

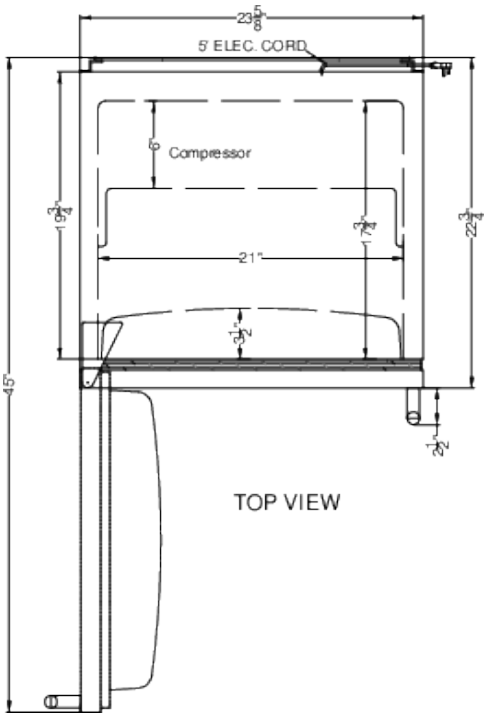

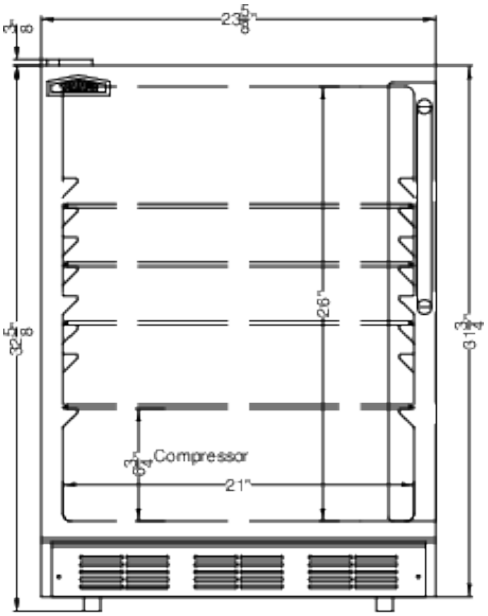

FRONT VIEW

SUMMIT APPLIANCE DIVISION, FELIX STORCH, INC. | ISO 9001:2015 Certified
770 Garrison Avenue Bronx, NY 10474 USA **TEL** 718-893-3900 **FAX** 844-478-8799 info@summitappliance.com **www.summitappliance.com**