SUMMIT

FFBF249SS2IMLHD

73.75" x 23.38" x 23.75" (H x W x D)

24" wide European counter depth bottom freezer refrigerator with factory-installed icemaker, stainless steel doors, gray cabinet, and digital controls for each section

Highlights:

Factory-installed icemaker ensures a steady supply of ice

Made in Europe

Full storage capacity in a uniquely slim 24" footprint ideal for smaller kitchens with full refrigeration needs

Product Features:

24" wide counter depth refrigerator-freezer	Made in Europe with a 24" footprint that offers full storage capacity in a uniquely slim, shallow depth fit
Stainless steel doors	Professional look in high quality stainless steel, with a unique curve to add a modern touch to any kitchen
Bottom freezer	Convenient design keeps all refrigerated storage at eye level for easier use
Digital thermostats	Separate digital controls located on the door let you adjust the refrigerator and freezer sections, with a digital display for added convenience
Factory-installed icemaker	Built-in icemaker in the freezer section keeps an 8 lb. supply of ice on hand, eliminating the need for cumbersome ice trays
Adaptive intelligent technology (AdaptTech)	Innovative sensors allow the unit to adjust to your habits, reading your patterns to manage the temperature based on the frequency of door openings and grocery loading
Adjustable glass shelves	Spill-proof safety glass with attractive steel trim ensure durable and easy-to-clean storage that can be rearranged as needed
Adjustable door storage	Three door racks can be adjusted in height to accommodate a variety of sizes
Bottle shelf	Adjustable scalloped steel rack lets you store wine or other bottles in a space-saving horizontal position

SUMMIT

FFBF249SS2IMLHD Specifications:

Overview	
Height of Cabinet	72.25" (184 cm)
Height to Hinge Cap	73.75" (187 cm)
Width	23.38" (59 cm)
Depth	23.75" (60 cm)
Depth with Handle	25.75" (65 cm)
Depth with door at 90°	45.38" (115 cm)
Capacity	10.6 cu.ft. (300 L)
Defrost Type	Frost-Free/Automatic
Door	Stainless Steel
Cabinet	Platinum
US Electrical Safety	ETL
Canadian Electrical Safety	ETL-C
Energy Usage/Year	454.0kWh/year
Amps	2.5
Voltage/Frequency	115 V AC/60 Hz
Weight	175.0 lbs. (79 kg)
Parts & Labor Warranty	1 Year
Compressor Warranty	5 Years
UPC	761101089690
Refrigerator-Freezer	
Door Swing	LHD
Reversible	Factory Reversible
Adjustable Shelves	Yes
Interior Drawers	Yes
Drawer Qty	4
Crisper Qty	2
Crisper Finish	Transparent
Crisper Cover	Glass
Wine Bottle Shelving	Yes
Interior Light	Yes
Refrigerator - Interior Height	36.0" (91 cm)
Refrigerator - Interior Width	19.63" (50 cm)
Refrigerator - Interior Depth	14.63" (37 cm)
Refrigerator - Capacity	7.1 cu.ft

Refrigerator - Shelf Type	Glass and Scalloped
Refrigerator - Shelf Qty	3
Refrigerator - Full Door Shelves	3
Refrigerator - Temperature Range	34º to 46ºF
Freezer - Interior Height	27.0" (69 cm)
Freezer - Interior Width	17.25" (44 cm)
Freezer - Interior Depth	17.63" (45 cm)
Freezer - Capacity	3.5 cu.ft
Thermostat Type	Digital
Fan Type	Interior
Refrigerant Type	R600a
Refrigerant Amount	1.13 oz.
Level Legs	2
Condensor Location	Rear of Unit
Freezer - Temperature Range	-6º to 6ºF
Compressor Step Height	10.5" (27 cm)
Compressor Step Width	17.25" (44 cm)
Compressor Step Depth	5.38" (14 cm)
Sound Level	32.8 dB

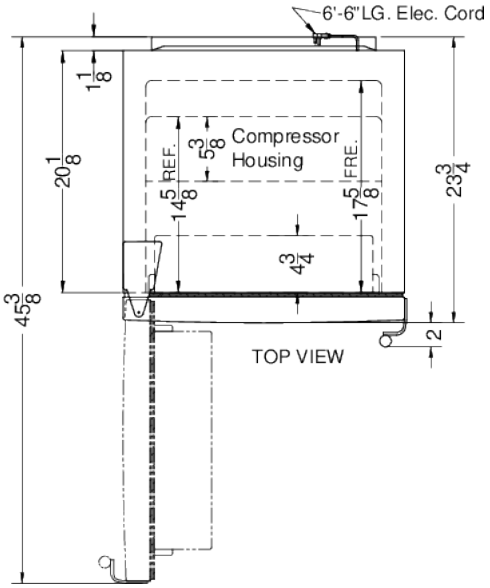

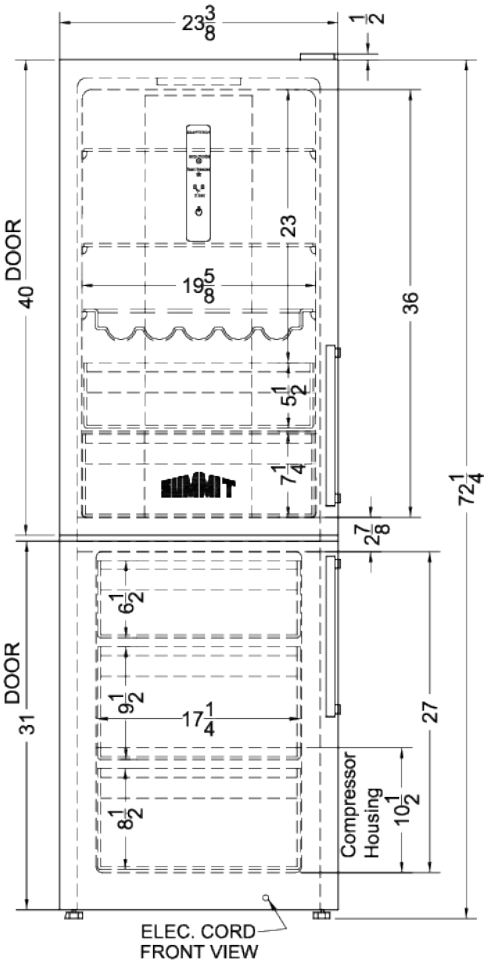

SUMMIT APPLIANCE DIVISION, FELIX STORCH, INC. | ISO 9001:2015 Certified
770 Garrison Avenue Bronx, NY 10474 USA **TEL** 718-893-3900 **FAX** 844-478-8799 info@summitappliance.com **www.summitappliance.com**