SUMMIT

ADFD2D24PNR

32" x 23.38" x 22.75" (H x W x D)

Commercially listed ENERGY STAR certified 2-drawer frost-free freezer in stainless steel designed for indoor or outdoor use under standard or ADA compliant counters

Highlights:

32" height for use under lower ADA compliant counters

Panel-ready drawers allow you to customize the look to match existing cabinetry

Weatherproof construction ensures safe use outdoors

Product Features:

2-Drawer All-Freezer	24" wide 3.5 cu.ft. undercounter frost-free freezer with two gliding drawers
ENERGY STAR certified	Ensures unit runs efficiently with an environmentally friendly performance
Panel-ready drawer fronts	Drawers can be customized with overlay panels to match or accent existing cabinetry (panel dimensions: 23.34" W x 13.93" D at 3/4" thick)
Indoor/Outdoor compatible	Durable, weatherproof construction designed to hold up to the elements
Commercially approved	ETL-S listed to NSF-7 standards for commercial use
ADA compliant	32” height allows for installation within ADA-compliant spaces
Stainless steel construction	Complete 304 grade stainless steel construction provides durability while maintaining an elegant look
Adjustable height	Unit can be raised to 34.5", with a taller kickplate included for a seamless look
Built-in capable	Front-breathing design allows the unit to be built-in under counters

SUMMIT APPLIANCE DIVISION, FELIX STORCH, INC. | ISO 9001:2015 Certified
770 Garrison Avenue Bronx, NY 10474 USA **TEL** 718-893-3900 **FAX** 844-478-8799 info@summitappliance.com **www.summitappliance.com**

SUMMIT

ADFD2D24PNR Specifications:
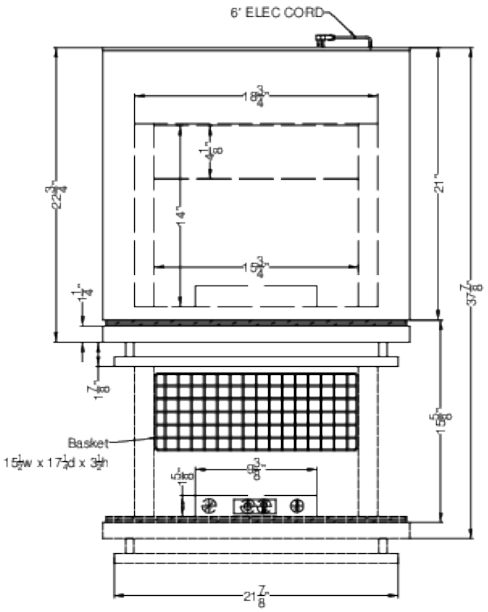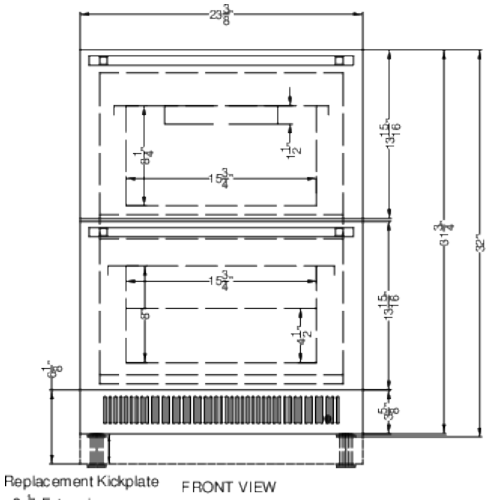
Overview	
Height of Cabinet	32.0" (81 cm)
Width	23.38" (59 cm)
Depth	22.75" (58 cm)
Depth with Handle	24.63" (63 cm)
Depth with door at 90°	37.88" (96 cm)
Capacity	3.5 cu.ft. (99 L)
Defrost Type	Frost-Free
Door	Panel-Ready
Cabinet	Stainless Steel
US Electrical Safety	ETL
Canadian Electrical Safety	ETL-C
Sanitation	ETL-S
Energy Usage/Year	355.0kWh/year
Amps	1.0
Voltage/Frequency	115 V AC/60 Hz
Weight	95.0 lbs. (43 kg)
Parts & Labor Warranty	1 Year
Compressor Warranty	5 Years
UPC	761101089027
Freezer	
Door Swing	Drawer
Height Adjustable	Yes
Thermostat Type	Digital
Interior Light	Yes
Fan Type	Interior and Exterior
Refrigerant Type	R600a
Refrigerant Amount	1.79 oz.
High Side PSI	320.0
Low Side PSI	120.0
Level Legs	4
Interior Height - Drawer 1	8.0" (20 cm)
Interior Width - Drawer 1	15.75" (40 cm)
Interior Depth - Drawer 1	14.0" (36 cm)
Interior Height - Drawer 2	8.25" (21 cm)
Interior Width - Drawer 2	15.75" (40 cm)
Interior Depth - Drawer 2	14.0" (36 cm)
Compressor Step Height	4.5" (11 cm)
Compressor Step Width	15.75" (40 cm)
Compressor Step Depth	4.13" (10 cm)
Temperature Range	-11°F to +10°F(-24°C to -12°C)