CWH1

37.5" x 19.5" x 18" (H x W x D)

Fully assembled casework hutch in a black finish designed to accept compact microwaves

Highlights:

Ships fully assembled

Made in the USA

Center cutout accepts a microwave, coffeemaker, or other small appliance

Product Features:

Cabinet hutch	19.5" wide vertical hutch designed to be installed on additional Summit casework cabinets
Ships fully assembled	Just place on your surface and secure with the included brackets
Made in the USA	Engineered wood with laminate finish manufactured and assembled in the United States
17" H x 18" W opening (top shelf) and 18" H x 18" W opening (lower section)	Allows you to place a small appliance such as a microwave, coffeemaker, or toaster oven inside
Cord cutouts	Rear includes two pre-installed holes to easily run a power cord through
Compatible with Summit units	Designed to accept our popular SM902BL or SM903BSA microwave
Lockdowel™ construction	Innovative fastening system ensures lasting durability
Black finish	Sleek black laminate finish suits any setting
Versatile design	Additional brands may fit inside. Note: to ensure the proper fit, please refer to the assembly drawings and take into account clearance requirements (such as raised door hinges or wide door openings) to ensure a clean fit

SUMMIT APPLIANCE DIVISION, FELIX STORCH, INC. | ISO 9001:2015 Certified
770 Garrison Avenue Bronx, NY 10474 USA **TEL** 718-893-3900 **FAX** 844-478-8799 info@summitappliance.com **www.summitappliance.com**

CWH1 Specifications:

Overview	
Height of Cabinet	37.5" (95 cm)
Width	19.5" (50 cm)
Depth	18.0" (46 cm)
Cabinet	Black
Weight	70.0 lbs. (32 kg)
Parts & Labor Warranty	90 Days
UPC	761101088556

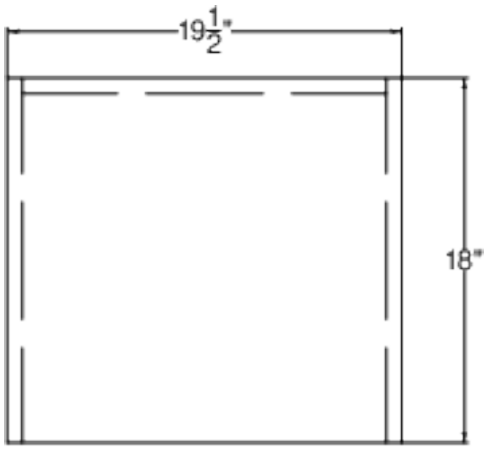

Plan

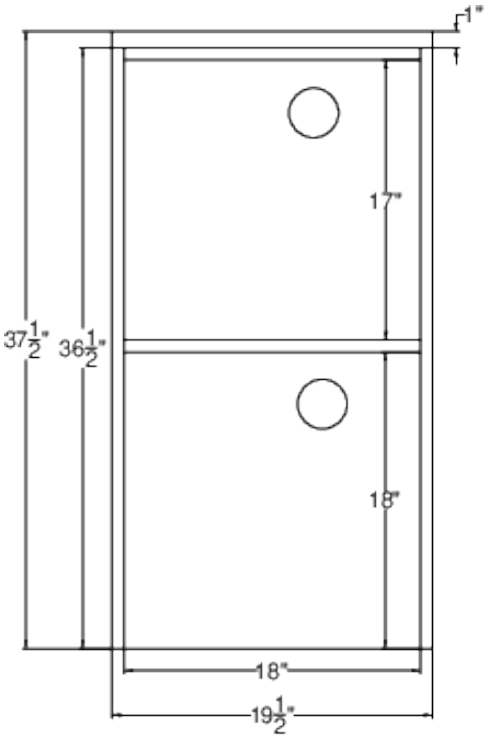

Elev

SUMMIT APPLIANCE DIVISION, FELIX STORCH, INC. | ISO 9001:2015 Certified
770 Garrison Avenue Bronx, NY 10474 USA **TEL** 718-893-3900 **FAX** 844-478-8799 info@summitappliance.com **www.summitappliance.com**