BRF631BKB

32.63" x 23.63" x 23" (H x W x D)

24 in. wide refrigerator-freezer for residential use with a cobalt blue door, stainless steel handle, and black cabinet

Highlights:

Striking finish in cobalt blue

Over 5 cu.ft. of storage capacity in a perfectly sized 24" footprint

Deluxe interior with glass shelves, door storage, and a scalloped wine shelf

Product Features:

24" wide European refrigerator-freezer	Designed for freestanding or recessed installation in 24" wide spaces
Slim counter height dimensions	Ideal 24" footprint offers full 5.1 cu.ft. storage capacity in a slim fit
Cobalt blue door	Deep blue finish with a slight gloss to elevate your undercounter space
Professional handle	Brushed stainless steel handle with a thin 14mm diameter is mounted horizontally across the door for a sleek look
Cycle defrost	This system utilizes user-friendly automatic defrost operation in the fresh food section and efficient manual defrost operation in the freezer compartment
Dual evaporator cooling	Our unique and efficient design separately cools the refrigerator while maintaining a lower temperature in the freezer compartment by utilizing two evaporators
Adjustable glass shelves	Rearrange the refrigerator space to fit any sized item or remove shelves for simple cleanup
Door shelves	Store tall bottles and condiments right on the door for convenient access
Wine shelf	Removable scalloped wine shelf is included to store champagne and wine bottles

SUMMIT

BRF631BKB Specifications:

Overview	
Height of Cabinet	32.63" (83 cm)
Width	23.63" (60 cm)
Depth	23.0" (58 cm)
Depth with Handle	24.5" (62 cm)
Depth with door at 90°	45.25" (115 cm)
Capacity	5.1 cu.ft. (144 L)
Defrost Type	Cycle
Door	Blue
Cabinet	Black
US Electrical Safety	ETL
Canadian Electrical Safety	ETL-C
Energy Usage/Year	365.0kWh/year
Amps	1.2
Voltage/Frequency	115 V AC/60 Hz
Weight	110.0 lbs. (50 kg)
Shipping Weight	133.0 lbs. (60 kg)
Parts & Labor Warranty	1 Year
Compressor Warranty	5 Years
UPC	761101087788
Refrigerator-Freezer	
Door Swing	RHD
Reversible	Yes
Adjustable Shelves	Yes
Crisper Qty	1
Crisper Finish	Transparent
Crisper Cover	Glass
Wine Bottle Shelving	Yes
Interior Light	Yes
Refrigerator - Interior Height	18.0" (46 cm)
Refrigerator - Interior Width	21.0" (53 cm)
Refrigerator - Interior Depth	18.0" (46 cm)
Refrigerator - Capacity	4.5 cu.ft
Refrigerator - Shelf Type	Glass
Refrigerator - Shelf Qty	2
Refrigerator - Full Door Shelves	3

Freezer - Interior Height	5.25" (13 cm)
Freezer - Interior Width	19.0" (48 cm)
Freezer - Interior Depth	11.5" (29 cm)
Freezer - Capacity	0.6 cu.ft
Thermostat Type	Dial
Refrigerant Type	R600a
Refrigerant Amount	0.92 oz.
High Side PSI	180.0
Low Side PSI	80.0
Compressor Step Height	5.5" (14 cm)
Compressor Step Width	21.0" (53 cm)
Compressor Step Depth	6.0" (15 cm)

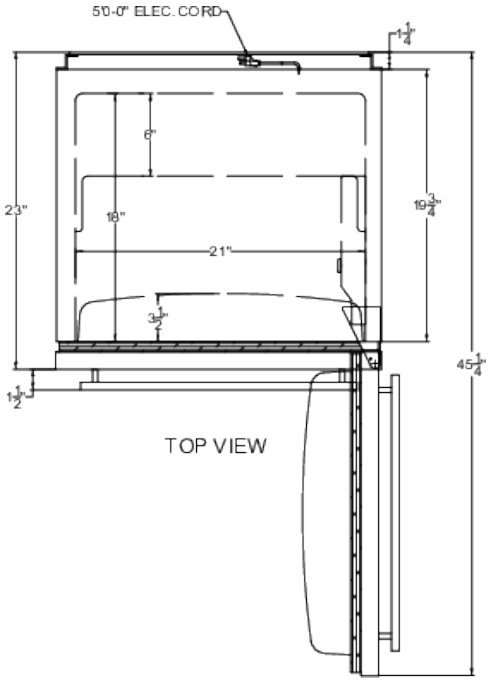

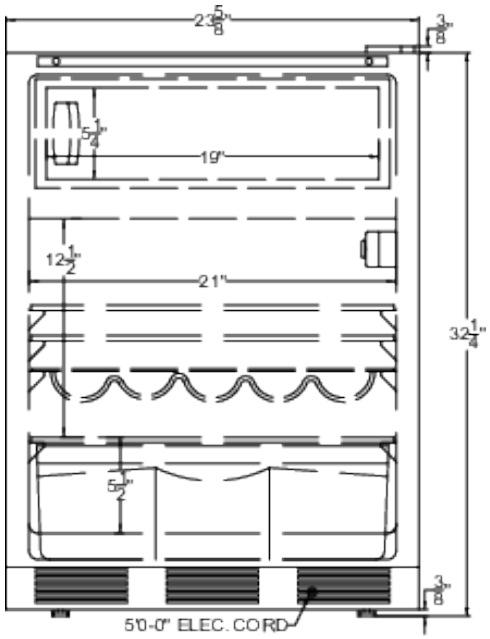

FRONT VIEW

SUMMIT APPLIANCE DIVISION, FELIX STORCH, INC. | ISO 9001:2015 Certified
770 Garrison Avenue Bronx, NY 10474 USA **TEL** 718-893-3900 **FAX** 844-478-8799 info@summitappliance.com **www.summitappliance.com**