accucold

SPFZ25

17" x 21.25" x 14.25" (H x W x D)

Portable 12V/24V vaccine freezer designed to operate between -20 and -27ºC with AC adapter included

Highlights:

Portable 12V/24V compressor-powered freezer for the safe storage of vaccines, pharmaceuticals, and other materials

Includes connections for both a 12/24V auxiliary power outlet and an adapter/cord for 110V outlets

Low temperature performance can run between -20 and -27ºC

Product Features:

Portable freezer	Designed to maintain the integrity of the cold chain when transporting sensitive materials
12V/24V DC hookup	Cord included to plug the unit into a vehicle's auxiliary power outlet or a 24V battery
AC Adapter included	We provide an AC adapter for users to plug the unit into a standard 110-120V wall socket for stationary use
Low temperature operation	Temperature range from -20 to -27ºC for a variety of storage applications, including certain vaccines
Hammered aluminum interior	Durable construction to hold up to everyday use
Digital thermostat	Easy temperature control with electronic buttons and an external thermometer readout
Side handles	Sturdy handles are easy to grab for comfortable lifting and carrying
Compressor-powered cooling	Reliable performance with fast temperature recovery
100% CFC free	Environmentally friendly design does not contain ozone-damaging chemicals

SUMMIT APPLIANCE DIVISION, FELIX STORCH, INC. | ISO 9001:2015 Certified
770 Garrison Avenue Bronx, NY 10474 USA **TEL** 718-893-3900 **FAX** 844-478-8799 info@summitappliance.com **www.summitappliance.com**

accucold

SPFZ25 Specifications:
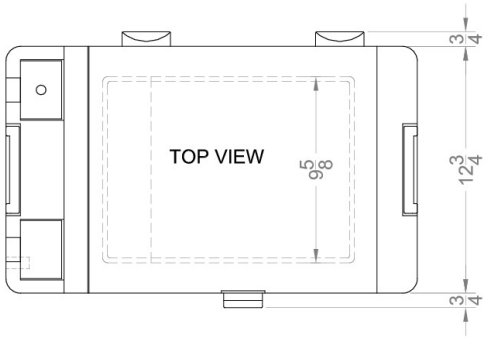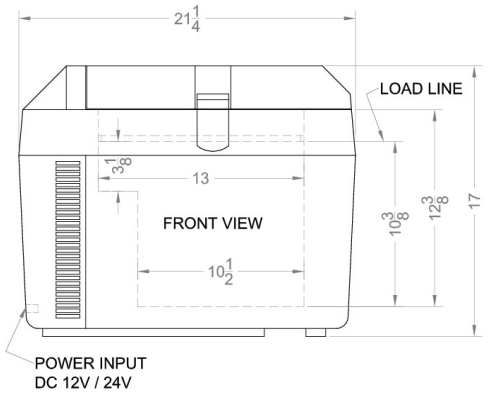
Overview	
Height of Cabinet	17.0" (43 cm)
Width	21.25" (54 cm)
Depth	14.25" (36 cm)
Capacity	0.88 cu.ft. (25 L)
Defrost Type	Manual
Door	White
Cabinet	Blue
Amps	7.0
Weight	30.0 lbs. (14 kg)
Parts & Labor Warranty	1 Year
Compressor Warranty	5 Years
UPC	761101084169
Freezer	
Door Swing	Lift-Up
Interior Height	12.0" (30 cm)
Interior Width	13.0" (33 cm)
Interior Depth	9.75" (25 cm)
Thermostat Type	Digital
Refrigerant Type	R290
Refrigerant Amount	0.81 oz.
High Side PSI	206.0
Low Side PSI	15.0
Compressor Step Height	7.25" (18 cm)
Compressor Step Width	2.5" (6 cm)
Compressor Step Depth	9.75" (25 cm)
Temperature Range	-20 to -27ºC
Sound Level	44.7 dB