SBC696OSNCFTWIN

34.25" x 23.75" x 25" (H x W x D)

Outdoor/indoor commercial nitro dual tap coffee dispenser for built-in or freestanding use, with complete tap kit, digital thermostat, stainless steel door, and black cabinet

Highlights:

Commercially listed to NSF-7 standards

Flexible design allows built-in or freestanding use in 24" spaces

Commercial grade dual style tap kit includes everything you need to serve creamy nitro-infused coffee on draft

Product Features:

Dispenses nitro-infused coffee	Stout style tap allows you to serve smooth nitro-infused cold brew on tap
Commercially approved	ETL-S listed to NSF-7 commercial standards and meets UL-471 for use in foodservice settings
Weatherproof design	Solid construction allows placement in the outdoors
Built-in capable	Front-breathing design allows fully recessed installation under counters
Full-sized coffee dispenser	Large interior can accept up to three cornelius kegs
Complete tap kit	Commercial grade tap kit includes a stainless steel stout tower, Nitrogen tank, regulator, and connections for ball lock cornelius kegs
Dual tap system	Twin style draft tower allows you to serve from two cornelius style kegs
Stainless steel door	Wrapped stainless steel door offers a professional look built to hold up to the elements
Professional handle	Blade style handle in brushed stainless steel matches many popular styles of cabinetry and grill details

SBC696OSNCFTWIN Specifications:

Overview	
Height of Cabinet	34.25" (87 cm)
Width	23.75" (60 cm)
Depth	25.0" (64 cm)
Depth with Handle	26.88" (68 cm)
Depth with door at 90°	47.75" (121 cm)
Capacity	6.04 cu.ft. (171 L)
Defrost Type	Automatic
Door	Stainless Steel
Cabinet	Black
US Electrical Safety	ETL
Canadian Electrical Safety	ETL-C
Sanitation	ETL-S
Amps	1.3
Voltage/Frequency	115 V AC/60 Hz
Weight	108.0 lbs. (49 kg)
Parts & Labor Warranty	1 Year
Compressor Warranty	5 Years
UPC	761101084725
Kegerator	
Door Swing	RHD
Reversible	Yes
Tap Kit	Yes
Height with Tap	50.38" (128 cm)
Number of Taps	2
Thermostat Type	Digital
Interior Light	Yes
Fan Type	Interior and Exterior
Refrigerant	R600a
Refrigerant Amount	1.76 oz.
High Side PSI	220.0
Low Side PSI	43.0
Inter Height	27.0" (69 cm)
Interior Width	20.38" (52 cm)
Interior Depth	21.25" (54 cm)
Compressor Step Height	5.5" (14 cm)
Compressor Step Width	9.63" (24 cm)
Compressor Step Depth	2.5" (6 cm)

Wheel Qty	4
Temperature Range	32º to 50ºF

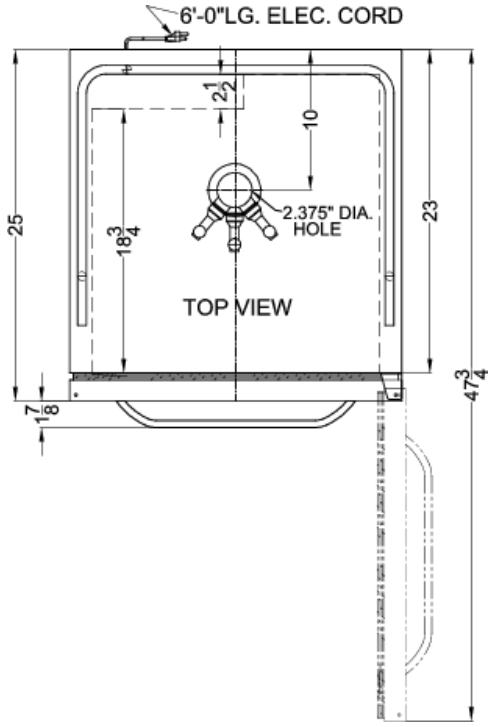

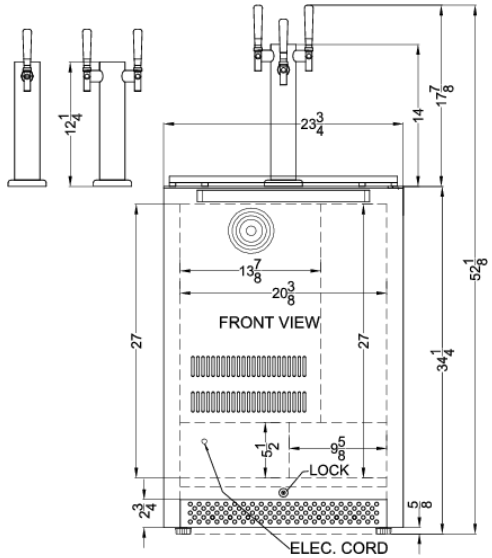

SUMMIT APPLIANCE DIVISION, FELIX STORCH, INC. | ISO 9001:2015 Certified
770 Garrison Avenue Bronx, NY 10474 USA **TEL** 718-893-3900 **FAX** 844-478-8799 info@summitappliance.com **www.summitappliance.com**