SBC696OSWKD

34.25" x 23.75" x 25" (H x W x D)

Outdoor/indoor commercial wine dispenser for built-in or freestanding use, with complete tap kit, digital thermostat, stainless steel door, and black cabinet

Highlights:

Commercially listed to NSF-7 standards

Complete wine tap kit includes tank for nitrogen/CO2 mix, regulator, and all the hardware needed to pour the perfect glass

Flexible design allows built-in or freestanding use in 24" spaces

Product Features:

Commercially approved	ETL-S listed to NSF-7 commercial standards and meets UL-471 for use in foodservice settings
Weatherproof design	Solid construction allows placement in the outdoors
Built-in capable	Front-breathing design allows fully recessed installation under counters
Full-sized wine dispenser	Large interior can accept a full half barrel keg, two slim quarter kegs, or up to three sixth barrel or Cornelius style kegs
Complete tap kit	Ships with a complete wine tap kit that includes a dispenser tower, regulator, and all the connection equipment you need to serve from a 1/6 wine keg or disposable wine keg
Nitrogen/CO2 tank included	Canister is best suited for a 75% nitrogen/25% CO2 mixture
Stainless steel door	Wrapped stainless steel door offers a professional look built to hold up to the elements
Professional handle	Blade style handle in brushed stainless steel matches many popular styles of cabinetry and grill details
Digital thermostat	Electronic controls ensure easy temperature management for optimum white wine and rosé storage, with a readout viewable in Celsius or Fahrenheit

SBC696OSWKD Specifications:

Overview	
Height of Cabinet	34.25" (87 cm)
Width	23.75" (60 cm)
Depth	25.0" (64 cm)
Depth with Handle	26.88" (68 cm)
Depth with door at 90°	47.75" (121 cm)
Capacity	6.04 cu.ft. (171 L)
Defrost Type	Automatic
Door	Stainless Steel
Cabinet	Black
US Electrical Safety	ETL
Canadian Electrical Safety	ETL-C
Sanitation	ETL-S
Amps	1.3
Voltage/Frequency	115 V AC/60 Hz
Weight	108.0 lbs. (49 kg)
Parts & Labor Warranty	1 Year
Compressor Warranty	5 Years
UPC	761101084770
Kegerator	
Door Swing	RHD
Reversible	Yes
Tap Kit	Yes
Height with Tap	50.38" (128 cm)
Number of Taps	1
Thermostat Type	Digital
Interior Light	Yes
Fan Type	Interior and Exterior
Refrigerant	R600a
Refrigerant Amount	1.76 oz.
High Side PSI	220.0
Low Side PSI	43.0
Inter Height	27.0" (69 cm)
Interior Width	20.38" (52 cm)
Interior Depth	21.25" (54 cm)
Compressor Step Height	5.5" (14 cm)
Compressor Step Width	9.63" (24 cm)
Compressor Step Depth	2.5" (6 cm)

Wheel Qty	4
Temperature Range	32º to 50ºF

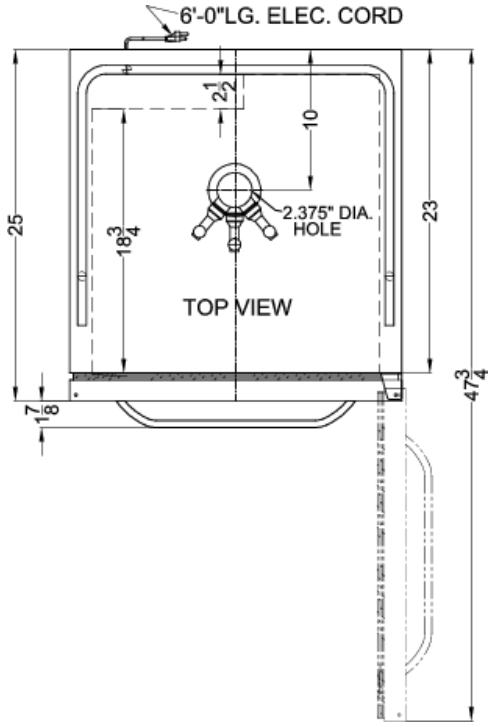

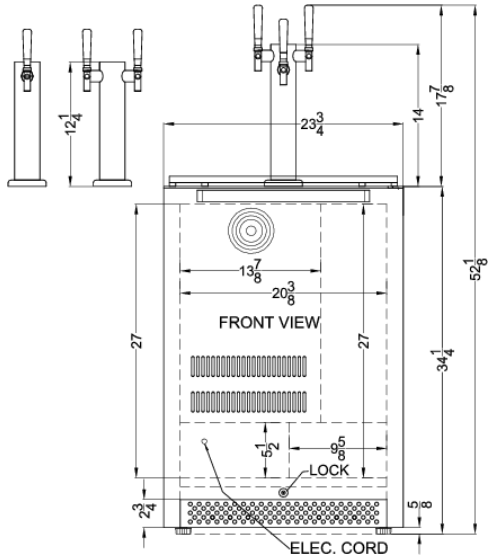

SUMMIT APPLIANCE DIVISION, FELIX STORCH, INC. | ISO 9001:2015 Certified
770 Garrison Avenue Bronx, NY 10474 USA **TEL** 718-893-3900 **FAX** 844-478-8799 info@summitappliance.com **www.summitappliance.com**