# CR2110B

4.38" x 11.88" x 19.75" (H x W x D)

115V 2-burner cooktop in black ceramic glass, made in Europe

## Highlights:

Two-burner electric cooktop with 115V operation

Smooth black ceramic glass surface offers easy cleanup and modern style

Includes push-to-turn knobs and heat indicator light for safer use

## Product Features:

| | |
|---|---|
| 2-burner design | Two evenly sized 6" elements for easy cooking |
| Powerful heating | Both elements can operate at 1200W to help cover most of your heating needs |
| Easy cleanup | Smooth glass surface with no cracks or crevices allows you to wipe down easily |
| SCHOTT CERAN® glass surface | Durable glass in an attractive jet black finish to suit any setting |
| Push-to-turn controls | Knobs require a gentle push to help prevent cooking accidents |
| Color-matched knobs | Jet black knobs complement the glass to offer a sleek, modern look |
| Residual heat indicator light | Indicates when surface is still hot to touch |
| Indicator lights | Individual indicator lights show which burner is in use |
| Designed for built-in installation | Fits counter cutout sizes that are 10 3/4" wide by 19" deep |

**SUMMIT APPLIANCE DIVISION**, FELIX STORCH, INC. | ISO 9001:2015 Certified
770 Garrison Avenue Bronx, NY 10474 USA **TEL** 718-893-3900 **FAX** 844-478-8799 info@summitappliance.com **www.summitappliance.com**

SUMMIT

## CR2110B Specifications:
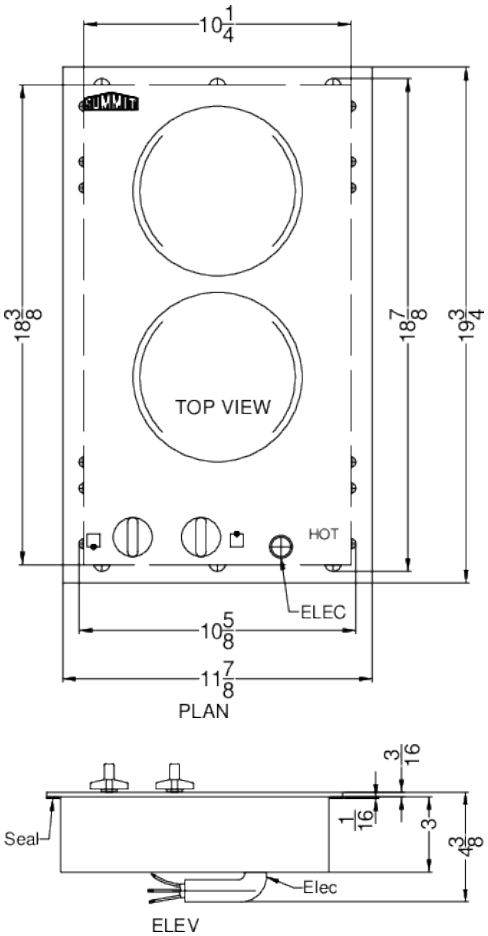
| Overview | |
|---|---|
| Height of Cabinet | 4.38" (11 cm) |
| Width | 11.88" (30 cm) |
| Depth | 19.75" (50 cm) |
| Cabinet | Black |
| US Electrical Safety | UL |
| Canadian Electrical Safety | ULC |
| Amps | 25.0 |
| Voltage/Frequency | 115 V AC/60 Hz |
| Weight | 14.0 lbs. (6 kg) |
| Shipping Weight | 17.5 lbs. (8 kg) |
| Parts & Labor Warranty | 1 Year |
| UPC | 761101079882 |
| **Electric Cooktop** | |
| Heating Type | Radiant |
| Surface | Glass |
| Element Type | Glasstop |
| Number of Elements | 2 |
| Controls | Dial |
| Countertop Cutout Height | 5.0" (13 cm) |
| Countertop Cutout Width | 10.75" (27 cm) |
| Countertop Cutout Depth | 19.0" (48 cm) |
| Power Source | 115V |
| Element #1 Size | 6.0" (15 cm) |
| Element #1 Wattage | 1200.0 |
| Element #2 Size | 6.0" (15 cm) |
| Element #2 Wattage | 1200.0 |
| Power Cord Included | No |