# SWCP2163LHD

69.5" x 23.63" x 26.5" (H x W x D)

Dual zone 163 bottle commercial wine cellar for built-in or freestanding use, with left-hand door swing, a glass door with seamless stainless steel trim, digital thermostat, full-extension shelving, and factory-installed lock

## Highlights:

Commercially approved design for reliable operation and easy cleanability

Seamless stainless steel trimmed glass door and LED lighting throughout the interior create an elegant presentation

Full-extension shelving on ball-bearing glides to roll out smoothly for easy loading

## Product Features:

| | |
|---|---|
| Commercially approved | ETL-S listed to NSF-7 standards for use in restaurants, bars, and other foodservice settings |
| Built-in capable | Front-breathing design allows the unit to be integrated with minimum clearance for a flush look (fits in spaces sized at 70.75" H x 23.88"W x 28" D) |
| Double pane tempered glass door | Provides a full display of the interior, with two levels of glass for added protection |
| Seamless stainless steel door frame | Single-piece door trim offers a more deluxe look |
| Two temperature zones | Chill white wine in the upper zone while preserving your reds at a warmer temperature below |
| Digital thermostat | Located inside the unit, the electronic thermostat allows easy temperature adjustment with a display in Celsius or Fahrenheit |
| Full-extension wire shelving | 13 shelves on ball-bearing glides glide out smoothly for easier loading and optimum capacity |
| Stainless steel trimmed shelving | Fronts feature a stainless steel accent to elevate your presentation |
| Versatile storage | Interior can hold up to 163 standard 750ml Bordeaux style bottles (20 bottles stacked on the upper shelf, 11 bottles per middle 12 shelves, and 11 on the slotted floor). If storing wider Burgundy style bottles (typically used for Pinot Noir or Chardonnay), you can accommodate up to 110 bottles (8 per shelf with 6 stacked on the slotted floor) |

**SUMMIT APPLIANCE DIVISION**, FELIX STORCH, INC. | ISO 9001:2015 Certified
770 Garrison Avenue Bronx, NY 10474 USA **TEL** 718-893-3900 **FAX** 844-478-8799 info@summitappliance.com **www.summitappliance.com**

SUMMIT

## SWCP2163LHD Specifications:

| Overview | |
|---|---|
| Height of Cabinet | 69.5" (177 cm) |
| Width | 23.63" (60 cm) |
| Depth | 26.5" (67 cm) |
| Depth with Handle | 28.25" (72 cm) |
| Depth with door at 90° | 48.75" (124 cm) |
| Bottles | 163 bottles |
| Defrost Type | Automatic |
| Door | Glass |
| Cabinet | Black |
| US Electrical Safety | ETL |
| Canadian Electrical Safety | ETL-C |
| Sanitation | ETL-S |
| Amps | 2.0 |
| Voltage/Frequency | 115 V AC/60 Hz |
| Weight | 269.0 lbs. (122 kg) |
| Parts & Labor Warranty | 1 Year |
| Compressor Warranty | 5 Years |
| UPC | 761101079288 |
| **Wine Cellar** | |
| Number of Zones | 2 |
| Door Swing | LHD |
| Reversible | No |
| Shelf Type | Wire |
| Shelf Qty | 13 |
| Thermostat Type | Digital |
| Interior Light | Yes |
| Fan Type | Interior and Exterior |
| Refrigerant Type | R600a |
| Refrigerant Amount | 1.76 oz. |
| High Side PSI | 320.0 |
| Low Side PSI | 120.0 |
| Interior Height 1 | 31.0" (79 cm) |
| Interior Width 1 | 23.38" (59 cm) |
| Interior Depth 1 | 21.0" (53 cm) |
| Level Legs | 2 |

| | |
|---|---|
| Temperature Range | 41-54°F (upper zone); 54-65°F (lower zone) |
| Interior Height 2 | 29.75" (76 cm) |
| Interior Width 2 | 23.38" (59 cm) |
| Interior Depth 2 | 21.0" (53 cm) |

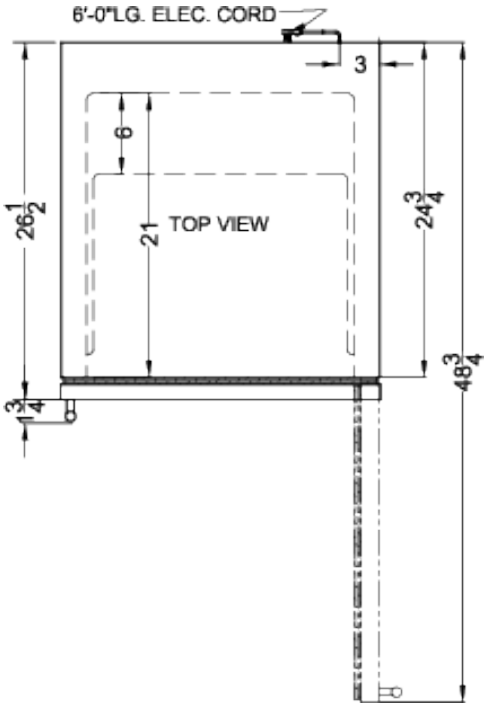


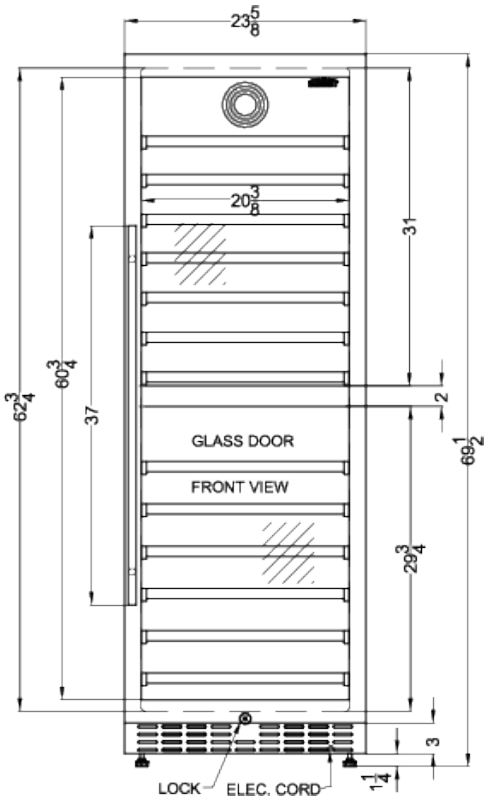


**SUMMIT APPLIANCE DIVISION**, FELIX STORCH, INC. | ISO 9001:2015 Certified
770 Garrison Avenue Bronx, NY 10474 USA **TEL** 718-893-3900 **FAX** 844-478-8799 info@summitappliance.com **www.summitappliance.com**