SUMMIT

ALFD24WBVPANTRY

32" x 23.38" x 22.75" (H x W x D)

ADA compliant built-in or freestanding dual zone produce and beverage refrigerator with seamless stainless steel trimmed French doors, digital controls, and a black cabinet

Highlights:

32" height for an easy fit under lower ADA compliant counters

Flexible design allows built-in or freestanding use in 24" spaces

Dual zone design lets you store meats, cheeses, beverages, and fresh produce at their proper temperature

Product Features:

Dual-zone design	Allows for safe storage of meats, cheeses, beverages, and fresh produce
Built-in capable	Make the best use of space by installing your appliance under the counter
ADA compliant	Sized at just 32" high for installation under lower ADA compliant counters
Height adjustable	Leveling legs can raise the unit to up to 33.5" for more standardized counters
Cold Zone	The left "Cold Zone" has a temperature range of 36-43° for storing meats, cheeses, and produce needing cooler temperatures
Pantry Zone	The right "Pantry Zone" has a temperature range of 41-68° for proper storage of produce requiring slightly warmer temperatures
Seamless stainless steel trim	Glass is framed by seamless 304 grade stainless steel
Digital thermostats	Set and adjust two temperature zones separately with easy-to-use digital controls that display the temperature in Celsius or Fahrenheit
Factory installed locks	Each door includes a keyed lock for optional security

SUMMIT APPLIANCE DIVISION, FELIX STORCH, INC. | ISO 9001:2015 Certified
770 Garrison Avenue Bronx, NY 10474 USA **TEL** 718-893-3900 **FAX** 844-478-8799 info@summitappliance.com **www.summitappliance.com**

SUMMIT

ALFD24WBVPANTRY Specifications:

Overview	
Height of Cabinet	32.0" (81 cm)
Width	23.38" (59 cm)
Depth	22.75" (58 cm)
Depth with Handle	24.63" (63 cm)
Depth with door at 90°	33.0" (84 cm)
Capacity	4.6 cu.ft. (130 L)
Bottles	21 bottles
Defrost Type	Automatic
Door	Glass
Cabinet	Black
US Electrical Safety	ETL
Canadian Electrical Safety	ETL-C
Amps	1.0
Voltage/Frequency	115 V AC/60 Hz
Weight	105.0 lbs. (48 kg)
Parts & Labor Warranty	1 Year
Compressor Warranty	5 Years
UPC	761101077499
Refrigerator Features	
Sabbath Mode	Yes
Door Swing	French
Reversible	No
Height Adjustable	Yes
Shelf Type	Glass Shelves and Wire Baskets
Shelf Qty	3
Adjustable Shelves	Yes
Wine Bottle Shelves	Yes
Thermostat Type	Digital
Fan Type	Interior and Exterior
Refrigerant Type	R600a
Refrigerant Amount	1.06oz.
High Side PSI	270.0
Low Side PSI	105.0
Level Legs Qty	4

Interior Light	Yes
Temperature Range	Cold Zone: 36-43°F; Pantry Zone: 41-68°F
Dimensions	
Interior Height	25.38" (64 cm)
Interior Width	8.38" (21 cm)
Interior Depth	17.5" (44 cm)
Compressor Step Height	3.5" (9 cm)
Compressor Step Width	8.38" (21 cm)
Compressor Step Depth	5.0" (13 cm)

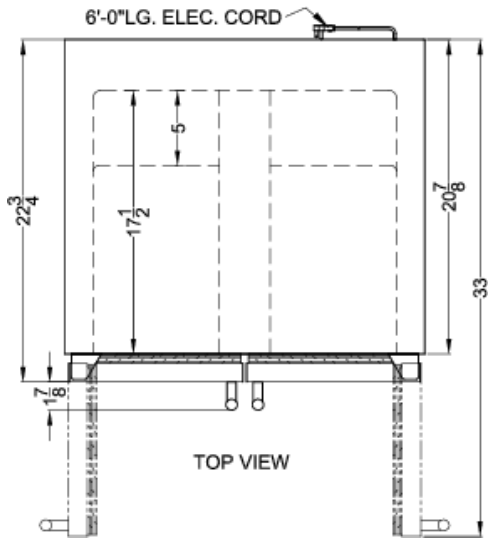

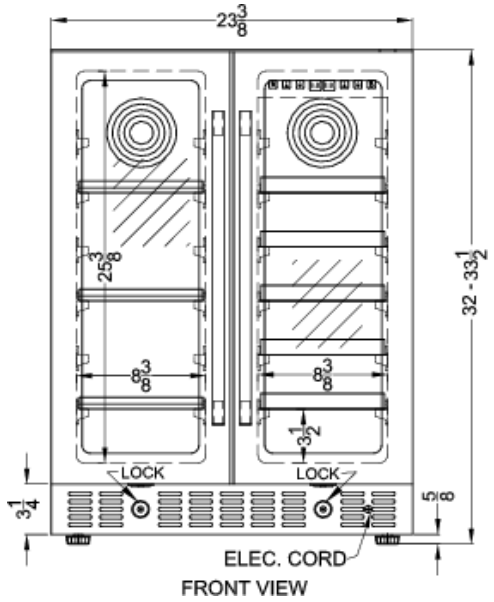

SUMMIT APPLIANCE DIVISION, FELIX STORCH, INC. | ISO 9001:2015 Certified
770 Garrison Avenue Bronx, NY 10474 USA **TEL** 718-893-3900 **FAX** 844-478-8799 info@summitappliance.com **www.summitappliance.com**