SUMMIT

REX2051BRT

36.5" x 19.75" x 24.25" (H x W x D)

20" wide slide-in look smooth-top electric range in black with oven window; replaces REX206B/RT

Highlights:

Unique 20" fit offers full cooking convenience for smaller kitchen spaces

Smooth ceramic cooktop for safer and cleaner cooking

Large oven window with light makes it easy to monitor your cooking without opening the door

Product Features:

20" width	Perfectly sized for apartments and smaller kitchens
Smooth ceramic glass top	Ceramic surface for easier cleaning and safer cooking
Oven window with light	Easier monitoring of your cooking with an oven window and on/off light
Waist-high broiler	Broiler is located inside the oven, making it easier to use
Removable backguard	Unit ships with low stainless steel backguard but can be easily converted to a traditional slide-in style for a more integrated look
Upfront controls	Control panel is conveniently located to prevent users from reaching over hot cooktop surface for adjustments
Four cooking zones	Surface features four 6 1/2" 1200W elements
Push-to-turn burner knobs	Burner knobs require a small amount of force to turn on for added protection against accidents; oven knob is not push-to-turn
Porcelain construction	Oven interior features high quality porcelain construction for long-lasting durability

SUMMIT APPLIANCE DIVISION, FELIX STORCH, INC. | ISO 9001:2015 Certified
770 Garrison Avenue Bronx, NY 10474 USA **TEL** 718-893-3900 **FAX** 844-478-8799 info@summitappliance.com **www.summitappliance.com**

SUMMIT

REX2051BRT Specifications:
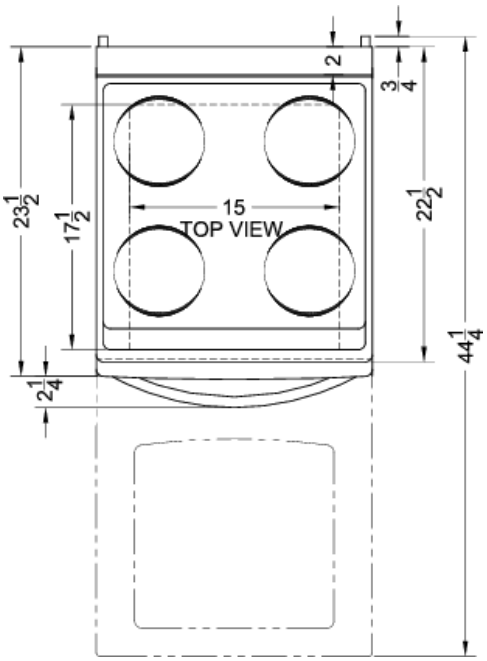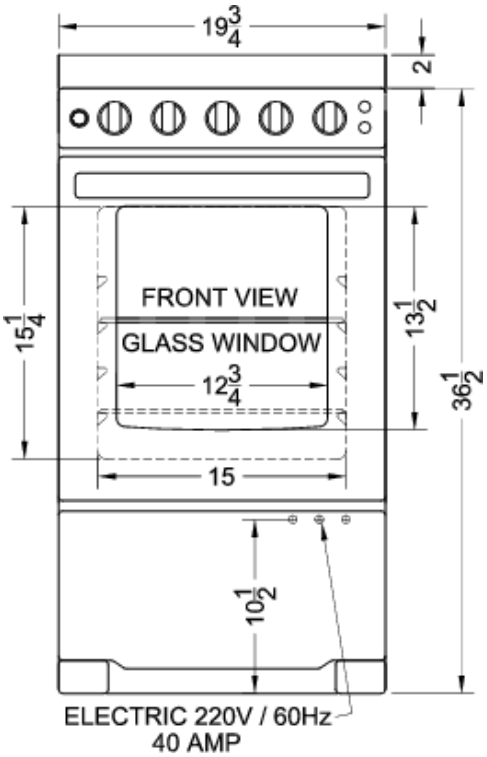
Overview	
Height of Cabinet	36.5" (93 cm)
Width	19.75" (50 cm)
Depth	24.25" (62 cm)
Depth with Handle	26.5" (67 cm)
Depth with door at 90°	44.25" (112 cm)
Door	Black
Cabinet	Black
US Electrical Safety	UL
Amps	40.0
Voltage/Frequency	220 V AC/60 Hz
Weight	100.0 lbs. (45 kg)
Parts & Labor Warranty	1 Year
UPC	761101069289
Electric Range	
Oven Capacity	2.3 cu.ft. (65 L)
Cooktop Surface	Glass
Element Type	Glasstop
Number of Elements	4
Element #1 Size	6.5" (17 cm)
Element #1 Wattage	1200.0
Element #2 Size	6.5" (17 cm)
Element #2 Wattage	1200.0
Element #3 Size	6.5" (17 cm)
Element #3 Wattage	1200.0
Element #4 Size	6.5" (17 cm)
Element #4 Wattage	1200.0
Burner Controls	Dial
Oven Controls	Dial
Oven Light	Yes
Backguard	Yes
Cleaning Type	Manual
Oven Rack Qty	2
Oven Window	Yes
Oven Interior Height	15.0" (38 cm)
Oven Interior Width	16.0" (41 cm)
Oven Interior Depth	17.5" (44 cm)
Power Source	220V
Broiler Location	Inside Oven