SUMMIT

FF63BK

32.63" x 23.63" x 23" (H x W x D)

Freestanding residential counter height all-refrigerator in black with automatic defrost and deluxe interior

Highlights:

Full 5.5 cu.ft. capacity inside a convenient 24" footprint

Automatic defrost ensures minimum user maintenance

Adjustable glass shelves for spill-proof storage

Product Features:

ENERGY STAR certified	Rated by the DOE to perform with more efficiency than federal standards require, saving your unit energy and you on higher utility costs
Slim counter height dimensions	Ideal 24" footprint offers full 5.5 cu.ft. storage capacity in a slim fit
Automatic defrost	Reduced maintenance with auto defrost system
One piece interior liner	Enjoy easy clean-up with a seamless liner that won't hold a mess in hidden crevices
Adjustable glass shelves	Rearrange your refrigerator space to accommodate all shapes and sizes or remove shelves for a simple clean-up
Door storage	Store tall bottles and condiments right on the door for convenient access
Wine shelf	Removable scalloped wine shelf is included to store champagne and wine bottles
Fruit and vegetable crisper	Get the longest life and best taste out of produce by storing greens in a convenient slide drawer
Interior light	Automatically illuminates when you open the door

SUMMIT APPLIANCE DIVISION, FELIX STORCH, INC. | ISO 9001:2015 Certified
770 Garrison Avenue Bronx, NY 10474 USA **TEL** 718-893-3900 **FAX** 844-478-8799 info@summitappliance.com **www.summitappliance.com**

SUMMIT

FF63BK Specifications:

Overview	
Height of Cabinet	32.63" (83 cm)
Height to Hinge Cap	32.63" (83 cm)
Width	23.63" (60 cm)
Depth	23.0" (58 cm)
Depth with Handle	24.63" (63 cm)
Depth with door at 90°	45.38" (115 cm)
Capacity	5.8 cu.ft. (164 L)
Defrost Type	Automatic
Door	Black
Cabinet	Black
US Electrical Safety	UL
Canadian Electrical Safety	ULC
Energy Usage/Year	280.0kWh/year
Amps	0.8
Voltage/Frequency	115 V AC/60 Hz
Weight	100.0 lbs. (45 kg)
Parts & Labor Warranty	1 Year
Compressor Warranty	5 Years
UPC	761101067483
Refrigerator Features	
Door Swing	RHD
Reversible	Yes
Crisper Qty	1
Crisper Finish	Opaque
Crisper Cover	Glass
Shelf Type	Glass
Shelf Qty	3
Full Door Shelf Qty	3
Adjustable Shelves	Yes
Wine Bottle Shelves	Yes
Thermostat Type	Dial
Refrigerant Type	R600a
Refrigerant Amount	0.64oz.
Level Legs Qty	2
Interior Light	Yes
Temperature Range	36 to 46°F
Sound Level	32.6 dBa

Dimensions	
Interior Height	26.25" (67 cm)
Interior Width	21.0" (53 cm)
Interior Depth	18.0" (46 cm)
Compressor Step Height	5.5" (14 cm)
Compressor Step Width	21.0" (53 cm)
Compressor Step Depth	6.0" (15 cm)

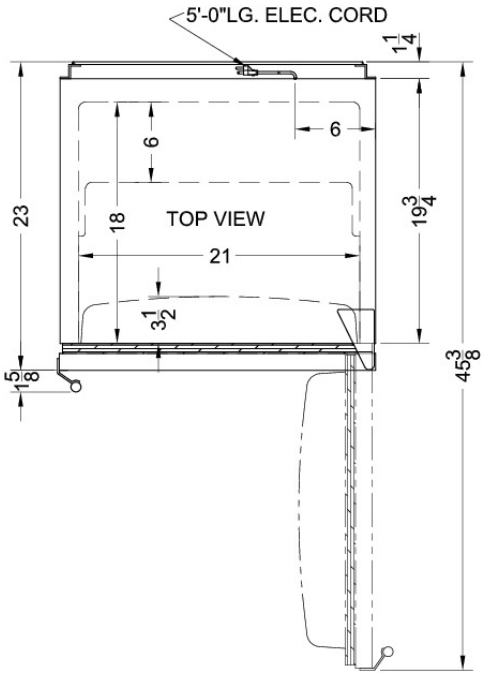

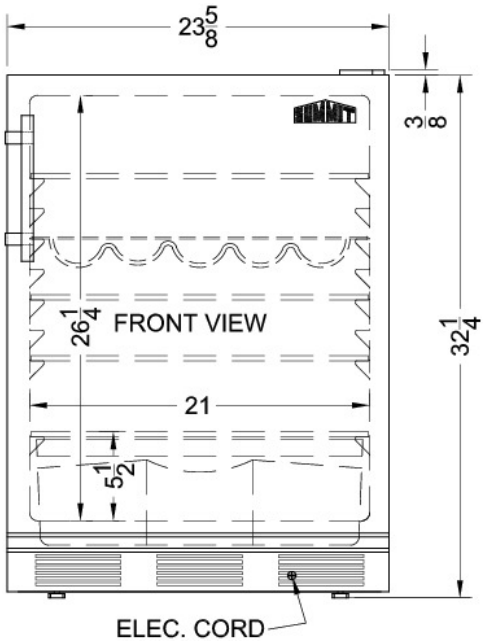

SUMMIT APPLIANCE DIVISION, FELIX STORCH, INC. | ISO 9001:2015 Certified
770 Garrison Avenue Bronx, NY 10474 USA **TEL** 718-893-3900 **FAX** 844-478-8799 info@summitappliance.com **www.summitappliance.com**