accucold

FF511LGP

34" x 19.25" x 21.38" (H x W x D)

20" wide general purpose, counter height all-refrigerator with auto defrost with a lock, internal fan, digital thermostat, and white exterior

Highlights:

Perfectly sized for use in healthcare facilities

Counter height all-refrigerator offers full 4.1 cu.ft. capacity

Internal fan ensures the interior is evenly cooled from top to bottom

Product Features:

Healthcare refrigerator	Designed for general purpose storage in institutional facilities
Slim 20" width	Full 4.1 cu.ft. capacity inside conveniently slim footprint
Factory installed lock	Top-mounted for convenient security
Fully finished white cabinet	Allows the unit to be used freestanding
Reversible door	Keep your options flexible with a reversible door that is easy to switch when your arrangement changes
Automatic defrost	Reduced maintenance with auto defrost system
Adjustable shelves	Rearrange refrigerator space to accommodate all sizes or remove shelves for simple cleanup
Crisper drawer	Get the longest life and best taste out your products in a bottom crisper
Flat door liner	Easy to clean, with more depth for storage

SUMMIT APPLIANCE DIVISION, FELIX STORCH, INC. | ISO 9001:2015 Certified
770 Garrison Avenue Bronx, NY 10474 USA **TEL** 718-893-3900 **FAX** 844-478-8799 info@summitappliance.com **www.summitappliance.com**

accucold

FF511LGP Specifications:

Overview	
Height of Cabinet	33.5" (85 cm)
Height to Hinge Cap	34.0" (86 cm)
Width	19.25" (49 cm)
Depth	21.38" (54 cm)
Depth with Handle	23.0" (58 cm)
Depth with door at 90°	39.5" (100 cm)
Capacity	4.1 cu.ft. (116 L)
Defrost Type	Automatic
Door	White
Cabinet	White
US Electrical Safety	ETL
Canadian Electrical Safety	ETL-C
Amps	1.4
Voltage/Frequency	115 V AC/60 Hz
Weight	57.0 lbs. (26 kg)
Parts & Labor Warranty	1 Year
Compressor Warranty	5 Years
UPC	761101068060
Refrigerator Features	
Door Swing	RHD
Reversible	Yes
Crisper Qty	1
Crisper Finish	Transparent
Crisper Cover	Glass
Shelf Type	Wire
Shelf Qty	3
Adjustable Shelves	Yes
Thermostat Type	Digital
Refrigerant Type	R134a
Refrigerant Amount	1.75oz.
High Side PSI	205.0
Low Side PSI	103.0
Level Legs Qty	2
Interior Light	Yes
Temperature Range	1 to 10°C
Dimensions	
Interior Height	28.5" (72 cm)
Interior Width	15.75" (40 cm)

Interior Depth	18.0" (46 cm)
Compressor Step Height	8.0" (20 cm)
Compressor Step Width	17.0" (43 cm)
Compressor Step Depth	6.75" (17 cm)

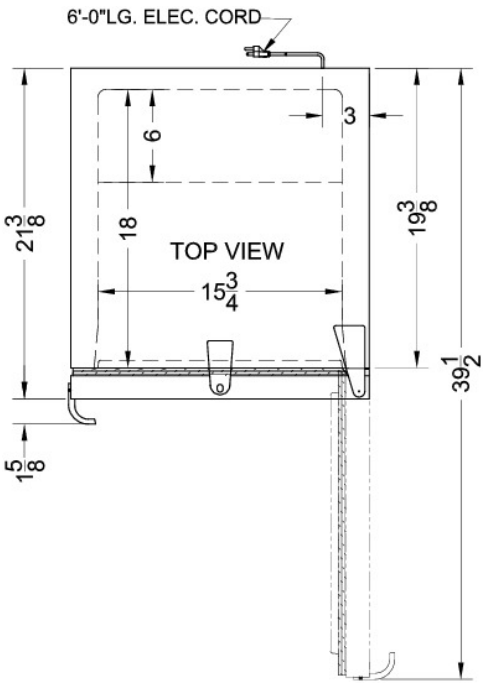

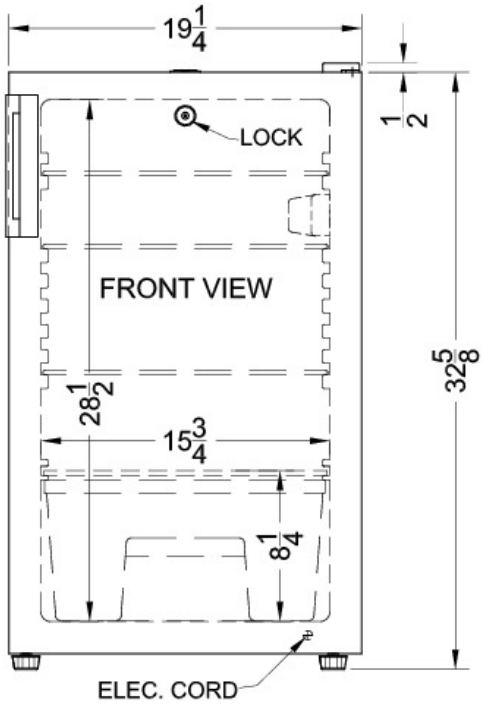

SUMMIT APPLIANCE DIVISION, FELIX STORCH, INC. | ISO 9001:2015 Certified
770 Garrison Avenue Bronx, NY 10474 USA **TEL** 718-893-3900 **FAX** 844-478-8799 info@summitappliance.com **www.summitappliance.com**