ALWC532CSS

31.63" x 23.5" x 23.38" (H x W x D)

ADA compliant commercially approved dual zone built-in wine cellar with digital thermostat, seamless stainless steel trimmed glass door, and stainless steel wrapped cabinet

Highlights:

Perfectly sized to fit under lower ADA compliant counters

Commercial grade design meets NSF-7 standards

Flexible design allows built-in or freestanding use in any 24" space

Product Features:

ADA compliant	Sized just under 32" high for an easy fit under lower ADA compliant counters
Commercially approved	ETL-S listed to NSF-7 standards for use in commercial applications
Built-in capable	Front-breathing design allows this unit to be installed under counters
Commercial shelving design	Black wire shelves with oversized stainless steel front trim for a modern look that's easier to clean than standard wood shelving
Full-extension shelving	Shelves move smoothly on ball-bearing glides for easier loading and unloading
Two temperature zones	Lower zone for reds has a temperature range of 50º F to 64º F; Upper zone stores whites and sparkling wine between 41º F and 50º F
Digital control panel	Easy temperature management with electronic controls located inside
Versatile readout	Temperature viewable in Celsius or Fahrenheit
Automatic defrost	Reduced maintenance with auto defrost system

SUMMIT APPLIANCE DIVISION, FELIX STORCH, INC. | ISO 9001:2015 Certified
770 Garrison Avenue Bronx, NY 10474 USA **TEL** 718-893-3900 **FAX** 844-478-8799 info@summitappliance.com **www.summitappliance.com**

SUMMIT

ALWC532CSS Specifications:

Overview	
Height of Cabinet	31.63" (80 cm)
Width	23.5" (60 cm)
Depth	23.38" (59 cm)
Depth with Handle	25.38" (64 cm)
Depth with door at 90°	45.75" (116 cm)
Bottles	46 bottles
Defrost Type	Automatic
Door	Glass
Cabinet	Stainless Steel
US Electrical Safety	ETL
Canadian Electrical Safety	ETL-C
Sanitation	ETL-S
Amps	1.25
Voltage/Frequency	115 V AC/60 Hz
Weight	113.0 lbs. (51 kg)
Parts & Labor Warranty	1 Year
Compressor Warranty	5 Years
UPC	761101065540
Wine Cellar	
Number of Zones	2
Door Swing	RHD
Reversible	Yes
Shelf Type	Wire
Shelf Qty	6
Thermostat Type	Digital
Interior Light	Yes
Fan Type	Interior and Exterior
Refrigerant Type	R600a
Refrigerant Amount	1.23 oz.
High Side PSI	150.0
Low Side PSI	50.0
Interior Height 1	11.63" (30 cm)
Interior Width 1	20.5" (52 cm)
Interior Depth 1	18.0" (46 cm)
Compressor Step Depth	6.0" (15 cm)
Level Legs	2
Temperature Range	41 to 64ºF

Interior Height 2	11.88" (30 cm)
Interior Width 2	20.5" (52 cm)
Interior Depth 2	18.0" (46 cm)
Sound Level	34 dB

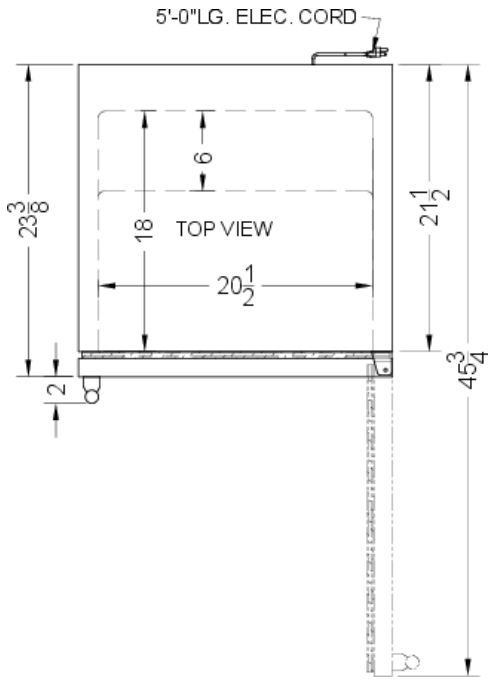

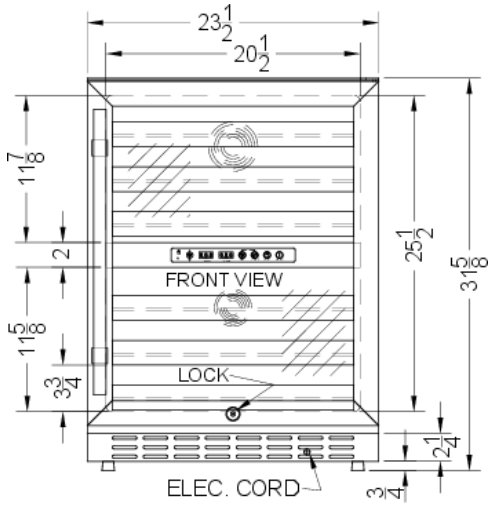

SUMMIT APPLIANCE DIVISION, FELIX STORCH, INC. | ISO 9001:2015 Certified
770 Garrison Avenue Bronx, NY 10474 USA **TEL** 718-893-3900 **FAX** 844-478-8799 info@summitappliance.com **www.summitappliance.com**