GCJ2SS

2.88" x 12" x 20" (H x W x D)

2-burner gas cooktop made in Italy with sealed burners, multiple heating outputs, a 304 grade stainless steel surface, and continuous cast iron grate

Highlights:

2 sealed burners provide optimal heating options in a modern design

A continuous cast iron grate offers easy use of the two burners

304 grade stainless steel surface ensures durability and elegance

Product Features:

Slim design	Ideal for tiny homes, apartment kitchens, boats, yachts, and similar environments
304 grade stainless steel surface	Long-lasting durability in a sleek design
Sealed burners	Quality burners by Defendi with cast iron caps ensure lasting durability and easier cleanup
Smooth edge design	Provides added safety and blends cleanly into countertops
Push-to-turn knobs	Safety feature requires you to turn the knob to the "full-on" position before pushing down, waiting for the ignition, and adjusting to your preferred heating level
Designer knobs	Heavy duty brass and aluminum knobs in a round design and steel finish for a modern look
Conversion kit included	Convert operation from natural gas to LP with the included kit
Continuous cast iron grate in a matte finish	Solid cast iron construction to support heavy cookware, with a continuous design that makes it easy to move pots to a different burner
Rapid burner	Top burner offers 10,000 BTU for cooking larger dishes

SUMMIT APPLIANCE DIVISION, FELIX STORCH, INC. | ISO 9001:2015 Certified
770 Garrison Avenue Bronx, NY 10474 USA **TEL** 718-893-3900 **FAX** 844-478-8799 info@summitappliance.com **www.summitappliance.com**

SUMMIT

GCJ2SS Specifications:

Overview	
Height of Cabinet	2.88" (7 cm)
Width	12.0" (30 cm)
Depth	20.0" (51 cm)
Cabinet	Stainless Steel
US Electrical Safety	ETL
Canadian Electrical Safety	ETL-C
Amps	1.0
Voltage/Frequency	115 V AC/60 Hz
Weight	12.0 lbs. (5 kg)
Shipping Weight	16.0 lbs. (7 kg)
Parts & Labor Warranty	1 Year
UPC	761101064284
Gas Cooktop	
Ignition	Electric
LP Convertible	Yes
Number of Burners	2
Controls	Dial
Surface	Stainless Steel
Grate Material	Cast iron
Cutout Width	11.25" (29 cm)
Cutout Depth	19.0" (48 cm)
Burner #1 BTU	10000.0
Burner #2 BTU	3400.0
Power Cord Included	Yes

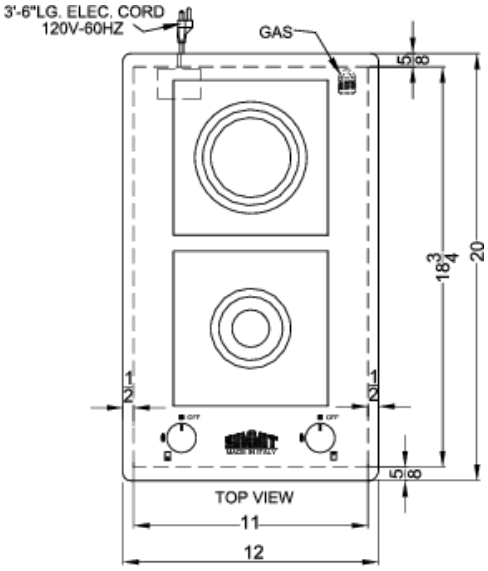

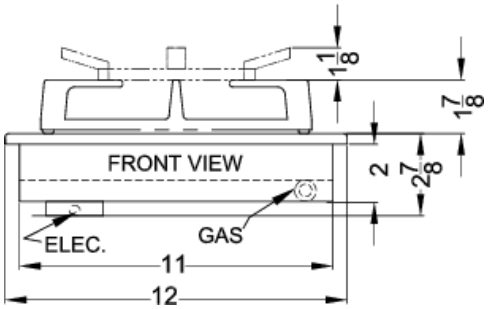

SUMMIT APPLIANCE DIVISION, FELIX STORCH, INC. | ISO 9001:2015 Certified
770 Garrison Avenue Bronx, NY 10474 USA **TEL** 718-893-3900 **FAX** 844-478-8799 info@summitappliance.com **www.summitappliance.com**