SCR2466B

34.25" x 23.5" x 23.38" (H x W x D)

Commercially approved 24" wide built-in beverage refrigerator designed for the display and refrigeration of beverages or sealed food, with seamless stainless steel trimmed glass door and front lock

Highlights:

Flexible design allows for built-in or freestanding use in commercial or residential settings

Commercial grade design meets NSF-7 standards

Seamless stainless steel trimmed glass door provides an elegant view of your collection

Product Features:

Commercially approved	ETL-S listed to NSF-7 commercial standards
Double pane tempered glass door	Provides a full display of the interior, with two levels of glass for added protection
Built-in capable	Front-breathing design allows the unit to be built-in under counters
Digital control panel	Makes for easy temperature reading/management with electronic controls inside
Seamless door frame	Single-piece door trim provides an elegant look
Factory installed lock	Keyed lock for secure interior, with two keys included
Dual-purpose functionality	Versatile design allows unit to serve as a cooler or refrigerator
Automatic defrost	Reduced maintenance with auto defrost system
Interior lighting	Soft LED lighting allows for easy viewing of interior contents while maintaining an elegant feel

SUMMIT APPLIANCE DIVISION, FELIX STORCH, INC. | ISO 9001:2015 Certified
770 Garrison Avenue Bronx, NY 10474 USA **TEL** 718-893-3900 **FAX** 844-478-8799 info@summitappliance.com **www.summitappliance.com**

SUMMIT

SCR2466B Specifications:

Overview	
Height of Cabinet	34.25" (87 cm)
Width	23.5" (60 cm)
Depth	23.38" (59 cm)
Depth with Handle	25.38" (64 cm)
Depth with door at 90°	45.75" (116 cm)
Capacity	4.2 cu.ft. (119 L)
Bottles	6 bottles
Defrost Type	Automatic
Door	Glass
Cabinet	Black
US Electrical Safety	ETL
Canadian Electrical Safety	ETL-C
Sanitation	ETL-S
Energy Usage/Year	295.0kWh/year
Amps	1.25
Voltage/Frequency	115 V AC/60 Hz
Weight	112.0 lbs. (51 kg)
Parts & Labor Warranty	1 Year
Compressor Warranty	5 Years
UPC	761101063133
Refrigerator Features	
Sabbath Mode	Yes
Door Swing	RHD
Reversible	Yes
Shelf Type	Glass and Chrome
Shelf Qty	4
Adjustable Shelves	Yes
Wine Bottle Shelves	Yes
Thermostat Type	Digital
Fan Type	Interior and Exterior
Refrigerant Type	R600a
Refrigerant Amount	1.23oz.
High Side PSI	150.0
Low Side PSI	50.0
Level Legs Qty	2
Interior Light	Yes
Temperature Range	34 to 65ºF

Sound Level	34.4 dB
Dimensions	
Interior Height	23.5" (60 cm)
Interior Width	19.0" (48 cm)
Interior Depth	17.0" (43 cm)
Compressor Step Height	5.5" (14 cm)
Compressor Step Width	19.0" (48 cm)
Compressor Step Depth	5.0" (13 cm)

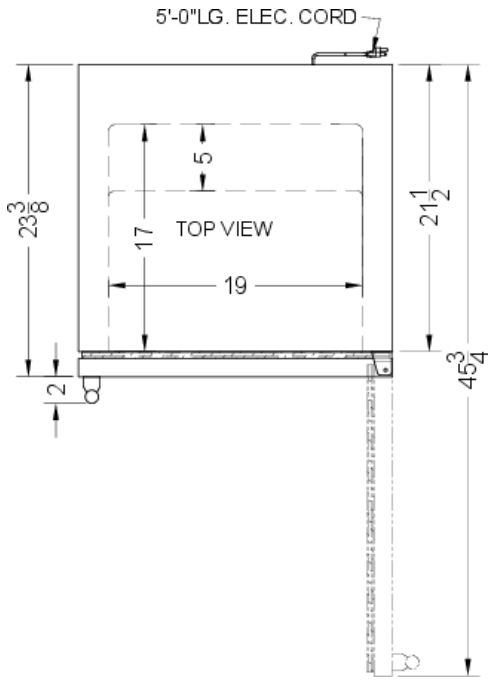

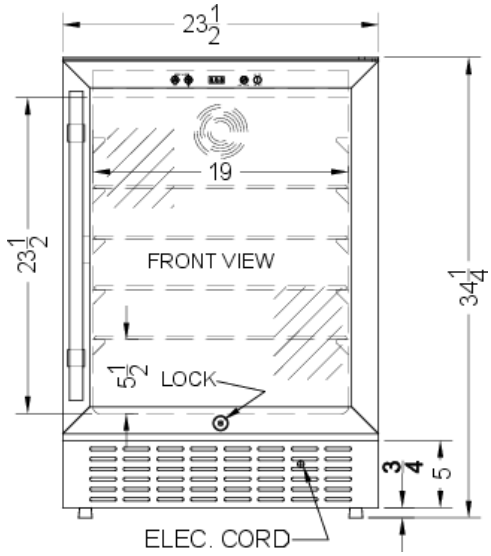

SUMMIT APPLIANCE DIVISION, FELIX STORCH, INC. | ISO 9001:2015 Certified
770 Garrison Avenue Bronx, NY 10474 USA **TEL** 718-893-3900 **FAX** 844-478-8799 info@summitappliance.com **www.summitappliance.com**