SUMMIT

MB26SS

22.25" x 15.88" x 19.5" (H x W x D)

Compact minibar with reversible stainless steel door, front lock, and black cabinet

Highlights:

Compact size is ideal for use in hotels and suites

Quiet compressor-based cooling system keeps stored items cold

Reversible stainless steel door brings added style to the room

Product Features:

Compact dimensions	Slim fit offers the ideal choice for hotel rooms and other settings with limited counter and cabinet space
Digital controls	Easy temperature management with a digital control panel that lets you choose between six temperature levels at the touch of a button
Compressor-based cooling system	Quiet operation with a true refrigeration system that keeps stored items cold
Quiet operation	Runs at just 33.4 dB for a quiet performance that won't disturb your guests
Factory installed lock	Front lock offers convenient security, with two keys included
Reversible door	User-reversible door swing for added flexibility
Stainless steel door	Brings an added touch of style to hotel rooms and other settings
Adjustable shelving	Two plastic shelves included, with ten glide positions to allow you to accommodate a range of sizes
Door storage	Two door racks are perfect for keeping smaller bottles and condiments in easy reach

SUMMIT

MB26SS Specifications:

Overview	
Height of Cabinet	22.25" (57 cm)
Width	15.88" (40 cm)
Width with Door Open	16.38" (42 cm)
Depth	19.5" (50 cm)
Depth with door at 90°	34.0" (86 cm)
Capacity	1.1 cu.ft. (31 L)
Defrost Type	Automatic
Door	Stainless Steel
Cabinet	Black
US Electrical Safety	ETL
Canadian Electrical Safety	ETL-C
Energy Usage/Year	144.0kWh/year
Amps	0.4
Voltage/Frequency	115 V AC/60 Hz
Weight	36.0 lbs. (16 kg)
Shipping Weight	65.5 lbs. (30 kg)
Parts & Labor Warranty	1 Year
Compressor Warranty	5 Years
UPC	761101065311
Refrigerator Features	
Door Swing	RHD
Reversible	Yes
Shelf Type	Plastic
Shelf Qty	2
Full Door Shelf Qty	2
Adjustable Shelves	Yes
Thermostat Type	Digital
Refrigerant Type	R600a
Refrigerant Amount	0.85oz.
Interior Light	Yes
Temperature Range	34 - 46 °F
Sound Level	33.4
Dimensions	
Interior Height	17.88" (45 cm)
Interior Width	12.25" (31 cm)
Interior Depth	9.75" (25 cm)
Compressor Step Height	9.0" (23 cm)
Compressor Step Width	12.25" (31 cm)
Compressor Step Depth	0.5" (1 cm)

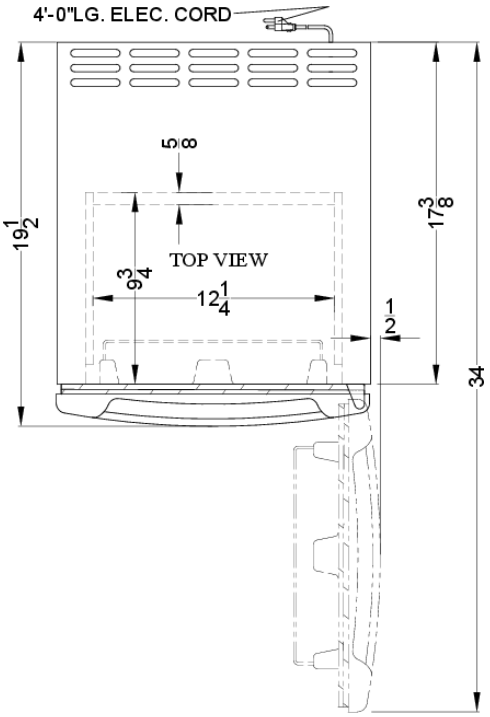

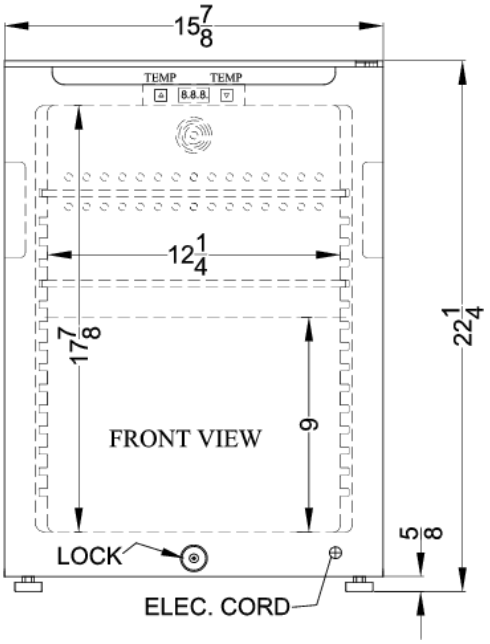

SUMMIT APPLIANCE DIVISION, FELIX STORCH, INC. | ISO 9001:2015 Certified
770 Garrison Avenue Bronx, NY 10474 USA **TEL** 718-893-3900 **FAX** 844-478-8799 info@summitappliance.com **www.summitappliance.com**