SBC58BBICSSADA

32.25" x 23.63" x 22.75" (H x W x D)

Built-in undercounter ADA height commercially listed dual tap beer dispenser in stainless steel

Highlights:

32 inch height fits under lower ADA compliant counters

Commercially listed to NSF-7 standards

Complete stainless steel exterior finish for true luxury under the counter

Product Features:

ADA compliant height	Sized at 32 inches high (32.25 to hinge cap) for installation under lower ADA compliant counters
Commercially approved	ETL-S listed to NSF-7 commercial standards and meets UL-471 for use in foodservice settings
Built-in capable	Front-breathing design allows fully recessed installation under counters
Complete tap kit	Includes a 5 lb. CO2 tank and regulator, dual tap draft arm, Sankey American tap, connection hardware, and cleaning kit
Dual tap system	Twin draft tower allows you to serve from two 1/6 (sixtel) sized kegs
Stainless steel finish	Door and cabinet are wrapped in 304 grade stainless steel for a professional look with lasting durability
Professional handle	Curved towel bar style handle in brushed stainless steel
Adjustable thermostat	Interior dial thermostat ensures easy temperature management
Automatic defrost	No-frost operation for minimum user maintenance

SBC58BBICSSADA Specifications:
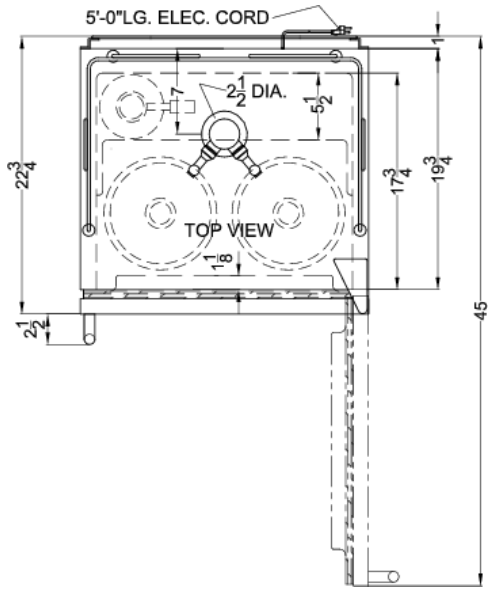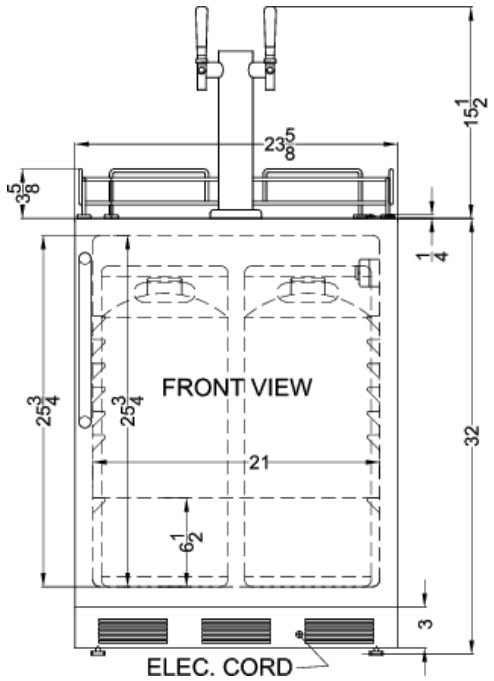
Overview	
Height of Cabinet	32.0" (81 cm)
Height to Hinge Cap	32.25" (82 cm)
Width	23.63" (60 cm)
Depth	22.75" (58 cm)
Depth with Handle	24.75" (63 cm)
Depth with door at 90°	45.0" (114 cm)
Capacity	5.5 cu.ft. (156 L)
Defrost Type	Automatic
Door	Stainless Steel
Cabinet	Stainless Steel
US Electrical Safety	ETL
Canadian Electrical Safety	ETL-C
Sanitation	ETL-S
Amps	1.3
Voltage/Frequency	115 V AC/60 Hz
Weight	110.0 lbs. (50 kg)
Parts & Labor Warranty	1 Year
Compressor Warranty	5 Years
UPC	761101062921
Kegerator	
Door Swing	RHD
Reversible	Factory Reversible
Tap Kit	Yes
Height with Tap	47.5" (121 cm)
Number of Taps	2
Thermostat Type	Dial
Interior Light	Yes
Fan Type	Exterior
Refrigerant	R134a
Refrigerant Amount	1.8 oz.
High Side PSI	285.0
Low Side PSI	88.0
Inter Height	25.75" (65 cm)
Interior Width	21.0" (53 cm)
Interior Depth	17.75" (45 cm)
Compressor Step Height	6.5" (17 cm)
Compressor Step Width	21.0" (53 cm)
Compressor Step Depth	5.5" (14 cm)
Temperature Range	34º to 43ºF