FF22B

21" x 18.75" x 17.5" (H x W x D)

Compact auto defrost all-refrigerator in black

Highlights:

Compact size is ideal for use on top of counters

Automatic defrost for easy user maintenance

Door racks offer convenient storage

Product Features:

Compact dimensions	Slim width and compact depth for easy placement on counters
Automatic defrost	Reduced user maintenance with auto defrost system
Interior LED light	Rocker switch lets you turn the light on and off as needed
Door shelves	Store tall bottles and condiments on a full and half door shelf for easier access
Removable wire shelf	Half shelf included to help you organize your storage as needed
Adjustable thermostat	Dial thermostat located inside to help prevent unnecessary temperature adjustments
Fully finished black cabinet	Allows the refrigerator to be used freestanding
Leveling legs	Front legs are adjustable, allowing you to keep the refrigerator level when placed on slightly unlevel surfaces
Sealed back	Space-saving convenience with easier cleanability

SUMMIT APPLIANCE DIVISION, FELIX STORCH, INC. | ISO 9001:2015 Certified
770 Garrison Avenue Bronx, NY 10474 USA **TEL** 718-893-3900 **FAX** 844-478-8799 info@summitappliance.com **www.summitappliance.com**

SUMMIT

FF22B Specifications:

Overview	
Height of Cabinet	20.5" (52 cm)
Height to Hinge Cap	21.0" (53 cm)
Width	18.75" (48 cm)
Depth	17.5" (44 cm)
Depth with door at 90°	35.0" (89 cm)
Capacity	1.7 cu.ft. (48 L)
Defrost Type	Automatic
Door	Black
Cabinet	Black
US Electrical Safety	ETL
Canadian Electrical Safety	ETL-C
Energy Usage/Year	265.0kWh/year
Amps	1.0
Voltage/Frequency	115 V AC/60 Hz
Weight	36.0 lbs. (16 kg)
Parts & Labor Warranty	1 Year
Compressor Warranty	5 Years
UPC	761101061405
Refrigerator Features	
Door Swing	RHD
Reversible	No
Shelf Type	Wire
Shelf Qty	1
Full Door Shelf Qty	1
Half Door Shelf Qty	1
Thermostat Type	Dial
Refrigerant Type	R600a
Refrigerant Amount	0.57oz.
High Side PSI	180.0
Low Side PSI	56.0
Interior Light	Yes
Sound Level	33.2 dB
Dimensions	
Interior Height	16.5" (42 cm)
Interior Width	15.5" (39 cm)
Interior Depth	14.0" (36 cm)
Compressor Step Height	7.0" (18 cm)
Compressor Step Width	15.5" (39 cm)
Compressor Step Depth	6.5" (17 cm)

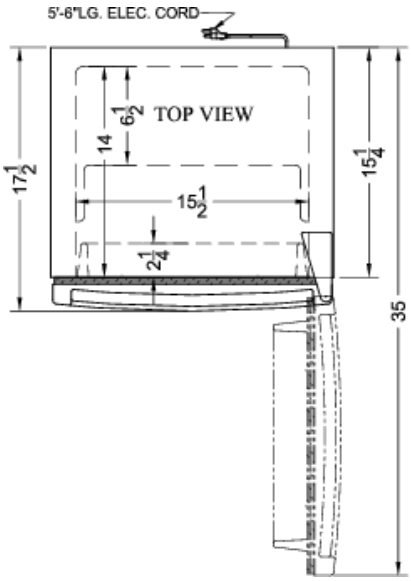

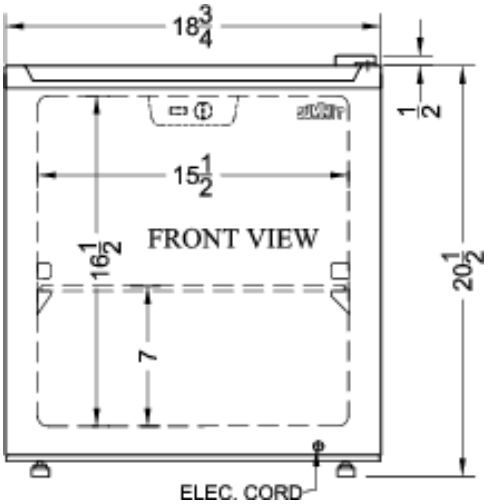

SUMMIT APPLIANCE DIVISION, FELIX STORCH, INC. | ISO 9001:2015 Certified
770 Garrison Avenue Bronx, NY 10474 USA **TEL** 718-893-3900 **FAX** 844-478-8799 info@summitappliance.com **www.summitappliance.com**