CRS5B13B

3.13" x 27" x 20.5" (H x W x D)

27" wide 5-burner radiant cooktop made in the USA in smooth black ceramic glass finish

Highlights:

Unique 27" width is ideally sized for many hard-to-fill cutouts

Smooth black finish in Schott Ceran glass offers easy cleanup

Includes one large 8" 1800W burner for faster heating

Product Features:

27" width	Designed to fit 25.25" W x 18.75" D cutouts
Schott Ceran surface	Smooth ceramic glass cooking surface in a sleek black finish
High output burner	Center burner features an 8" diameter for 1800W of cooking power, ideal for larger cooking vessels
Standard burners	Four 6.5" 1200W burners meet most heating needs
E.G.O. burners	Considered by many to be the industry's best cooking technology
Push-to-turn knobs	Controls require a gentle push to help prevent cooking accidents
Indicator lights	Each burner includes an indicator light to show when the unit is on
Stainless steel trim	Thick stainless steel border adds an extra touch of style
230V operation	Requires professional hardwired installation to 230V power supply

SUMMIT APPLIANCE DIVISION, FELIX STORCH, INC. | ISO 9001:2015 Certified
770 Garrison Avenue Bronx, NY 10474 USA **TEL** 718-893-3900 **FAX** 844-478-8799 info@summitappliance.com **www.summitappliance.com**

SUMMIT

CRS5B13B Specifications:

Overview	
Height of Cabinet	3.13" (8 cm)
Width	27.0" (69 cm)
Depth	20.5" (52 cm)
Cabinet	Black
US Electrical Safety	ETL
Canadian Electrical Safety	ETL-C
Amps	25.0
Voltage/Frequency	230 V AC/60 Hz
Weight	35.0 lbs. (16 kg)
Shipping Weight	42.5 lbs. (19 kg)
Parts & Labor Warranty	1 Year
UPC	761101060347
Electric Cooktop	
Heating Type	Radiant
Surface	Glass
Element Type	Glasstop
Number of Elements	5
Controls	Dial
Countertop Cutout Width	25.25" (64 cm)
Countertop Cutout Depth	18.75" (48 cm)
Element #1 Size	8.0" (20 cm)
Element #1 Wattage	1800.0
Element #2 Size	6.5" (17 cm)
Element #2 Wattage	1200.0
Element #3 Size	6.5" (17 cm)
Element #3 Wattage	1200.0
Element #4 Size	6.5" (17 cm)
Element #4 Wattage	1200.0
Element #5 Size	6.5" (17 cm)
Element #5 Wattage	1200.0
Power Cord Included	No

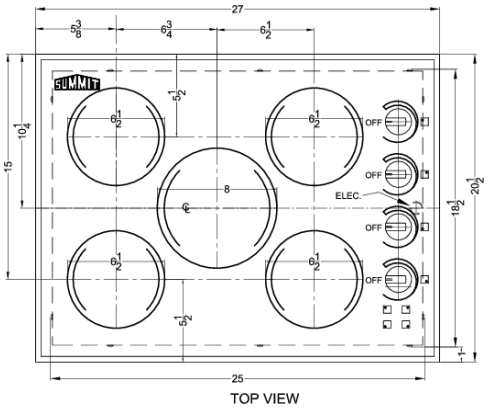

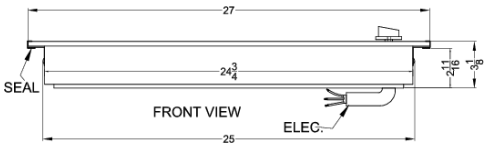

SUMMIT APPLIANCE DIVISION, FELIX STORCH, INC. | ISO 9001:2015 Certified
770 Garrison Avenue Bronx, NY 10474 USA **TEL** 718-893-3900 **FAX** 844-478-8799 info@summitappliance.com **www.summitappliance.com**