SUMMIT

RE2411W

42" x 23.5" x 23.5" (H x W x D)

24" wide electric range in white finish with coil burners, lower storage compartment, and oven window

Highlights:

24" fit is ideal for smaller homes

Added space savings with a lower storage drawer

Large oven window makes it easy to keep track of your cooking

Product Features:

24" width	Perfectly sized for apartments and smaller home kitchens
Storage drawer	Lower compartment offers the perfect space-saving storage solution for pots and pans
Oven window	Large window makes it easier to monitor your cooking
Oven light	Interior light included for easy viewing
Waist-high broiler	Broiler is located inside the oven, making it easier to use
Backsplash	High backing prevents stovetop contents from splashing up or boiling over and staining back walls
Four cooking zones	Surface features one 8" and three 6" coil elements to accommodate a range of sizes and cooking needs
Safety elements	Designed to comply with the latest UL safety standards, each coil element is equipped with a sensor to cycle off if the temperature nears the flashpoint. Coils will resume heating shortly after, causing little interruption to your cooking
Upfront controls	Control panel is conveniently located to prevent users from reaching over hot cooktop surface for adjustments

SUMMIT APPLIANCE DIVISION, FELIX STORCH, INC. | ISO 9001:2015 Certified
770 Garrison Avenue Bronx, NY 10474 USA **TEL** 718-893-3900 **FAX** 844-478-8799 info@summitappliance.com **www.summitappliance.com**

SUMMIT

RE2411W Specifications:

Overview	
Height of Cabinet	42.0" (107 cm)
Width	23.5" (60 cm)
Depth	23.5" (60 cm)
Depth with Handle	25.75" (65 cm)
Depth with door at 90°	43.25" (110 cm)
Door	White
Cabinet	White
US Electrical Safety	UL
Voltage/Frequency	220 V AC/60 Hz
Weight	135.0 lbs. (61 kg)
Shipping Weight	165.5 lbs. (75 kg)
Parts & Labor Warranty	1 Year
UPC	761101058290
Electric Range	
Oven Capacity	2.9 cu.ft. (82 L)
Cooktop Surface	Metal
Element Type	Coils
Number of Elements	4
Element #1 Size	8.0" (20 cm)
Element #1 Wattage	2400.0
Element #2 Size	6.0" (15 cm)
Element #2 Wattage	1250.0
Element #3 Size	6.0" (15 cm)
Element #3 Wattage	1250.0
Element #4 Size	6.0" (15 cm)
Element #4 Wattage	1250.0
Burner Controls	Dial
Oven Controls	Dial
Oven Light	Yes
Backguard	Yes
Cleaning Type	Manual
Oven Rack Qty	2
Oven Window	Yes
Oven Interior Height	15.0" (38 cm)
Oven Interior Width	20.0" (51 cm)
Oven Interior Depth	17.5" (44 cm)
Power Source	220V
Storage Compartment	Yes

Broiler Location	Inside Oven

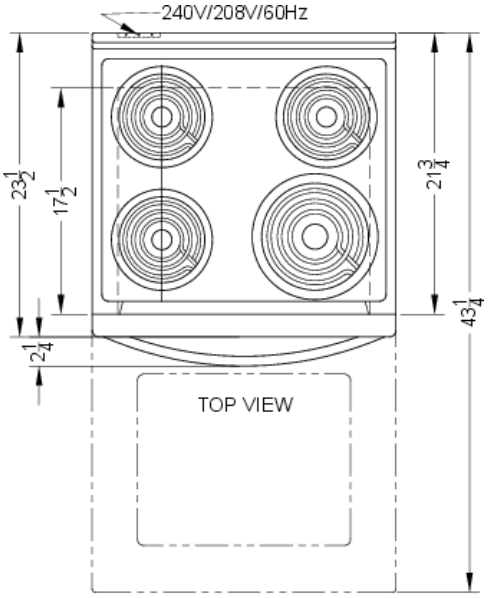

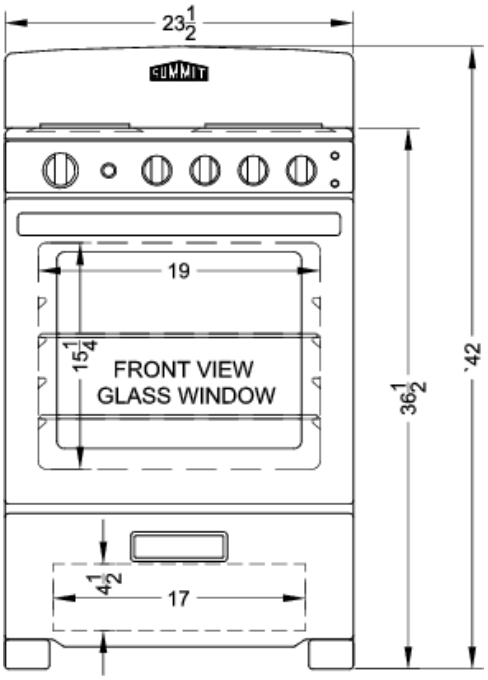

SUMMIT APPLIANCE DIVISION, FELIX STORCH, INC. | ISO 9001:2015 Certified
770 Garrison Avenue Bronx, NY 10474 USA **TEL** 718-893-3900 **FAX** 844-478-8799 info@summitappliance.com **www.summitappliance.com**