SUMMIT

# ALR15BSS

31.5" x 14.75" x 23.5" (H x W x D)

15" wide ADA compliant all-refrigerator for built-in or freestanding use, with digital controls, LED light, lock, stainless steel door, and black cabinet

## Highlights:

32" height allows installation under lower ADA compliant counters

Just under 15" wide for an easy fit, with a flush back design to save space

Flexible design allows built-in or freestanding use under counters

## Product Features:

| | |
|---|---|
| ADA Compliant | Sized just under 32" high to fit under lower ADA compliant counters |
| Built-in capable | Make the best use of space by installing your appliance under the counter |
| Factory installed lock | Keyed lock for a secure interior, with two keys included |
| Digital thermostat | Electronic controls for precise temperature management. |
| Digital display | Temperature readout can be shown in Celsius or Fahrenheit |
| LED lighting | Gentle illumination with an on/off switch |
| Frost-free operation | No-frost operation ensures reduced maintenance |
| Adjustable glass shelves | Rearrange refrigerator space to accommodate all sizes or remove shelves for simple cleanup |
| Door storage | Two racks offer the perfect storage solution for tall bottles and condiments |

**SUMMIT APPLIANCE DIVISION**, FELIX STORCH, INC. | ISO 9001:2015 Certified
770 Garrison Avenue Bronx, NY 10474 USA **TEL** 718-893-3900 **FAX** 844-478-8799 info@summitappliance.com **www.summitappliance.com**

SUMMIT

## ALR15BSS Specifications:

| Overview | |
|---|---|
| Height of Cabinet | 31.5" (80 cm) |
| Width | 14.75" (37 cm) |
| Depth | 23.5" (60 cm) |
| Capacity | 2.2 cu.ft. (62 L) |
| Defrost Type | Frost-Free |
| Door | Stainless Steel |
| Cabinet | Black |
| US Electrical Safety | ETL |
| Canadian Electrical Safety | ETL-C |
| Sanitation | ETL-S |
| Energy Usage/Year | 240.0kWh/year |
| Amps | 1.0 |
| Voltage/Frequency | 115 V AC/60 Hz |
| Weight | 60.0 lbs. (27 kg) |
| Parts & Labor Warranty | 1 Year |
| Compressor Warranty | 5 Years |
| UPC | 761101061498 |
| **Refrigerator Features** | |
| Sabbath Mode | Yes |
| Door Swing | RHD |
| Reversible | Yes |
| Shelf Type | Glass |
| Shelf Qty | 3 |
| Full Door Shelf Qty | 2 |
| Adjustable Shelves | Yes |
| Thermostat Type | Digital |
| Fan Type | Interior and Exterior |
| Refrigerant Type | R600a |
| Refrigerant Amount | 0.78oz. |
| High Side PSI | 270.0 |
| Low Side PSI | 105.0 |
| Level Legs Qty | 4 |
| Interior Light | Yes |
| Temperature Range | 36°F to 43°F |
| **Dimensions** | |
| Interior Height | 23.0" (58 cm) |
| Interior Width | 10.5" (27 cm) |
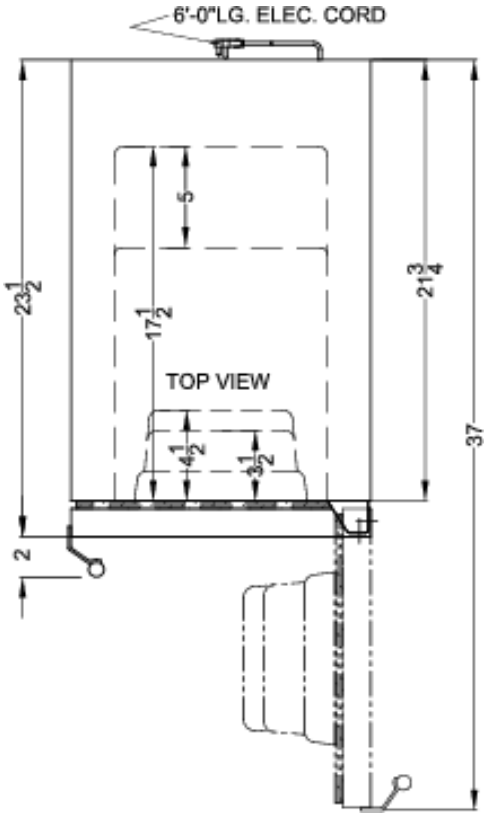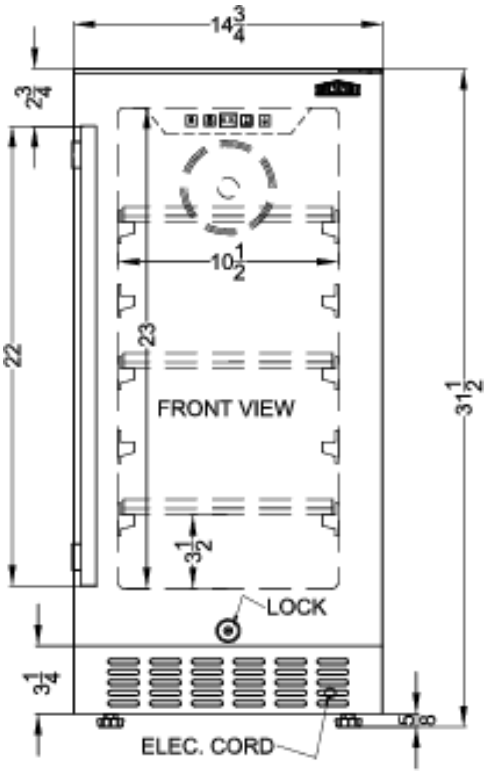
| | |
|---|---|
| Interior Depth | 17.5" (44 cm) |
| Compressor Step Height | 3.5" (9 cm) |
| Compressor Step Width | 10.5" (27 cm) |
| Compressor Step Depth | 5.0" (13 cm) |