BKRF661BIADA

32.25" x 23.63" x 23" (H x W x D)

Built-in undercounter ADA compliant break room refrigerator-freezer in white with NIST calibrated thermometer and alarm

Highlights:

32" height allows installation under lower ADA compliant counters

High/low temperature alarm warns of fluctuations outside the specified temperature range

Includes a factory-installed NIST calibrated thermometer to provide a continuous temperature display

Product Features:

ADA Compliant	Sized at 32" high for use under lower ADA compliant counters
Slim counter height dimensions	Ideal 24" footprint offers full 5.1 cu.ft. storage capacity in a slim fit
Built-in capable	Make the best use of space by installing your appliance under the counter and flush with other cabinets
NIST calibrated thermometer	Thermometer provides an external readout of the current and high/low refrigerator temperature to the nearest tenth of a degree
High/low temperature alarm	Audible alarm sounds if the refrigerator interior temperature rises or falls out of set range
Cycle defrost	This system utilizes user-friendly automatic defrost operation in the fresh food section and efficient manual defrost operation in the freezer compartment
Dual evaporator cooling	Our unique and efficient design separately cools the refrigerator while maintaining a lower temperature in the freezer compartment by utilizing two evaporators
Adjustable glass shelves	Rearrange your refrigerator space to accommodate all shapes and sizes or remove shelves for a simple clean-up
Fruit and vegetable crisper	Get the longest life and best taste out of produce by storing it in a convenient slide drawer

SUMMIT APPLIANCE DIVISION, FELIX STORCH, INC. | ISO 9001:2015 Certified
770 Garrison Avenue Bronx, NY 10474 USA **TEL** 718-893-3900 **FAX** 844-478-8799 info@summitappliance.com **www.summitappliance.com**

SUMMIT

BKRF661BIADA Specifications:

Overview	
Height of Cabinet	32.0" (81 cm)
Height to Hinge Cap	32.25" (82 cm)
Width	23.63" (60 cm)
Depth	23.0" (58 cm)
Depth with Handle	24.63" (63 cm)
Depth with door at 90°	45.38" (115 cm)
Capacity	5.1 cu.ft. (144 L)
Defrost Type	Cycle
Door	White
Cabinet	White
US Electrical Safety	UL
Canadian Electrical Safety	ULC
Energy Usage/Year	365.0kWh/year
Amps	1.4
Voltage/Frequency	115 V AC/60 Hz
Weight	100.0 lbs. (45 kg)
Parts & Labor Warranty	1 Year
Compressor Warranty	5 Years
UPC	761101061368
Refrigerator-Freezer	
Door Swing	RHD
Reversible	Yes
Adjustable Shelves	Yes
Crisper Qty	1
Crisper Finish	Transparent
Crisper Cover	Glass
Interior Light	Yes
Refrigerator - Interior Height	18.0" (46 cm)
Refrigerator - Interior Width	21.0" (53 cm)
Refrigerator - Interior Depth	18.0" (46 cm)
Refrigerator - Capacity	4.5 cu.ft
Refrigerator - Shelf Type	Glass
Refrigerator - Shelf Qty	2
Refrigerator - Full Door Shelves	3
Freezer - Interior Height	5.25" (13 cm)
Freezer - Interior Width	19.0" (48 cm)
Freezer - Interior Depth	11.5" (29 cm)
Freezer - Capacity	0.6 cu.ft
Thermostat Type	Dial
Refrigerant Type	R600a
Refrigerant Amount	0.92 oz.
High Side PSI	180.0
Low Side PSI	80.0
Compressor Step Height	5.5" (14 cm)
Compressor Step Width	21.0" (53 cm)
Compressor Step Depth	6.0" (15 cm)

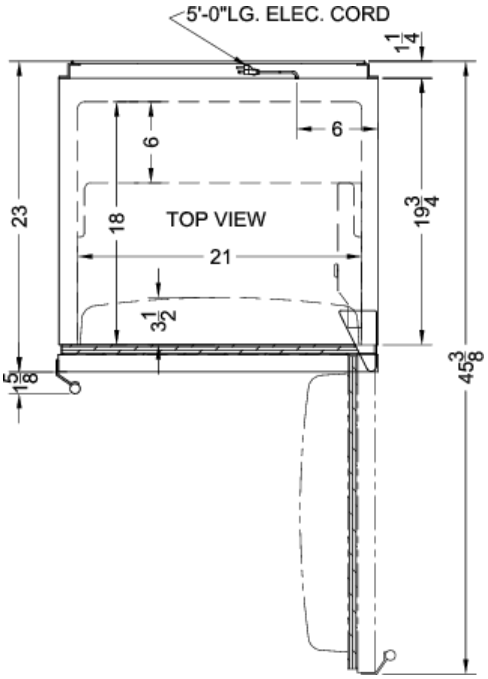

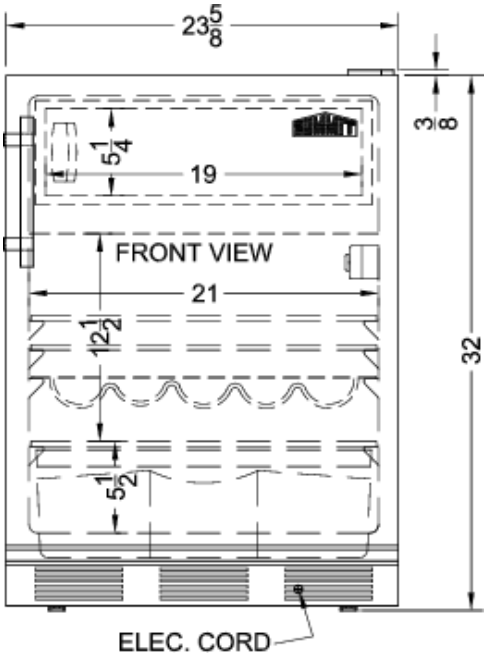

SUMMIT APPLIANCE DIVISION, FELIX STORCH, INC. | ISO 9001:2015 Certified
770 Garrison Avenue Bronx, NY 10474 USA **TEL** 718-893-3900 **FAX** 844-478-8799 info@summitappliance.com **www.summitappliance.com**