SUMMIT

FDRD15SS

71" x 26.88" x 26.75" (H x W x D)

Counter depth ENERGY STAR certified French door refrigerator with two bottom freezer drawers in stainless steel finish

Highlights:

Uniquely sized with a 27" footprint

ENERGY STAR certified to help save on energy bills and maximize efficiency

Digital temperature controls for both the refrigerator and freezer section

Product Features:

ENERGY STAR certified	Rated by the DOE to perform with more efficiency than federal standards require, saving your unit energy and you on higher utility costs
Counter depth	Sized at just under 27" deep for an easy fit in space-challenged kitchens, with a 24.5" depth from the rear to doors
Stainless steel doors	Professional look with a French door swing on the refrigerator section brings a modern touch to any kitchen
Bottom freezer drawers	Two slide-out freezer drawers help you maximize storage for easier accessibility
Digital thermostats	Separate digital controls located on the door let you adjust the refrigerator and freezer sections, with a digital display for added convenience
Adjustable glass shelves	Spill-proof safety glass for durable and easy-to-clean storage that can be rearranged as needed, with a steel front trim for an attractive accent
Adjustable shelf depth	One glass shelf can be separated at the middle to create two shallower depth shelves, perfect for opening the refrigerator up to store taller items
Adjustable door storage	Eight door racks can be adjusted in height to accommodate a variety of sizes
Dual crispers	Two clear drawers helps to ensure the optimum storage of fruits and vegetables

SUMMIT

FDRD15SS Specifications:

Overview	
Height of Cabinet	71.0" (180 cm)
Width	26.88" (68 cm)
Width with Door Open	27.88" (71 cm)
Depth	26.75" (68 cm)
Depth with Handle	28.0" (71 cm)
Depth with door at 90°	40.5" (103 cm)
Capacity	13.7 cu.ft. (388 L)
Defrost Type	Frost-Free/Automatic
Door	Stainless Steel
Cabinet	Gray
US Electrical Safety	CSA
Canadian Electrical Safety	CSA-C
Energy Usage/Year	414.0kWh/year
Amps	2.1
Voltage/Frequency	115 V AC/60 Hz
Weight	220.0 lbs. (100 kg)
Parts & Labor Warranty	1 Year
Compressor Warranty	5 Years
UPC	761101059303
Refrigerator-Freezer	
Door Swing	French
Adjustable Shelves	Yes
Interior Drawers	Yes
Crisper Finish	Transparent
Crisper Cover	Glass
Interior Light	Yes
Refrigerator - Interior Height	33.75" (86 cm)
Refrigerator - Interior Width	23.0" (58 cm)
Refrigerator - Interior Depth	20.63" (52 cm)
Refrigerator - Capacity	8.93 cu.ft
Refrigerator - Shelf Type	Glass
Refrigerator - Shelf Qty	2
Refrigerator - Half Door Shelves	8
Refrigerator - Temperature Range	34º to 46ºF

Freezer - Interior Width	19.5" (50 cm)
Freezer - Capacity	4.77 cu.ft
Thermostat Type	Digital
Fan Type	Interior
Refrigerant Type	R600a
Refrigerant Amount	1.9 oz.
Level Legs	2
Freezer - Temperature Range	-6º to 6ºF

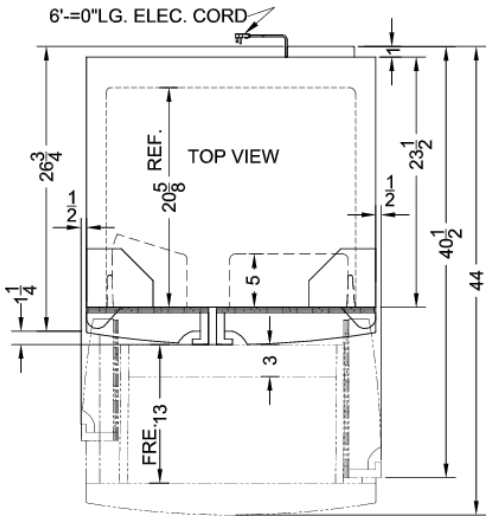

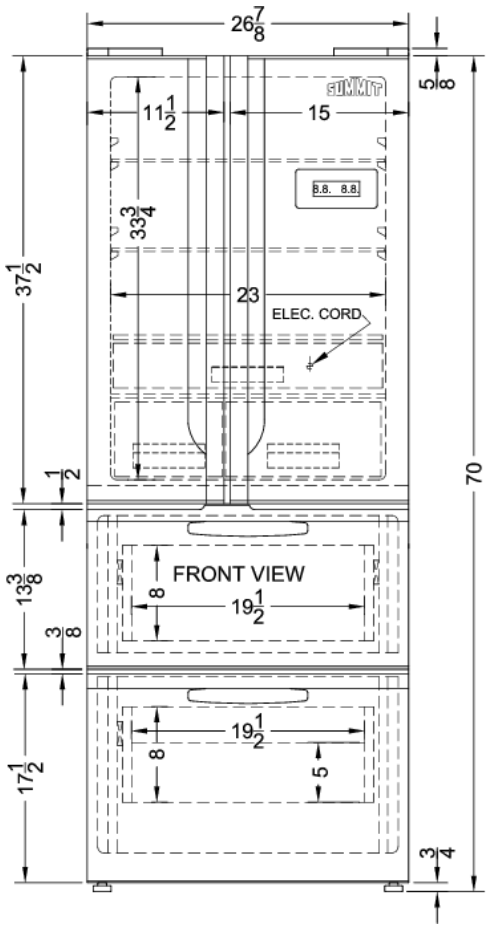

SUMMIT APPLIANCE DIVISION, FELIX STORCH, INC. | ISO 9001:2015 Certified
770 Garrison Avenue Bronx, NY 10474 USA **TEL** 718-893-3900 **FAX** 844-478-8799 info@summitappliance.com **www.summitappliance.com**