SCFU1211

59.38" x 26.75" x 26" (H x W x D)

Upright commercial display freezer with digital thermostat, frost-free operation, and self-closing glass door; replaces SCFU1210

Highlights:

ETL-S listed for commercial use

Self-closing door ensures items aren't left exposed to room temperature

True frost-free operation saves on maintenance by preventing icy buildup

Product Features:

Commercially listed	ETL-S listed to NSF standards for commercial use
Frost-free operation	No-frost convenience requires no manual defrosting
Digital thermostat	Electronic controls for easy temperature management
Self-closing door	Ideal for busy commercial settings, where customers and staff don't always have the chance to ensure the door is closed
Double pane thermal glass door	Heat-safe design offers full display of interior
Cantilevered shelves	Rearrange freezer space to accommodate a variety of sizes
Strong commercial shelving	Each shelf can hold loads that weigh up to 88 lbs.
Light box	Illuminated canopy lets you insert your own decal
Interior light	LED lighting provides full view of stored products

SCFU1211 Specifications:
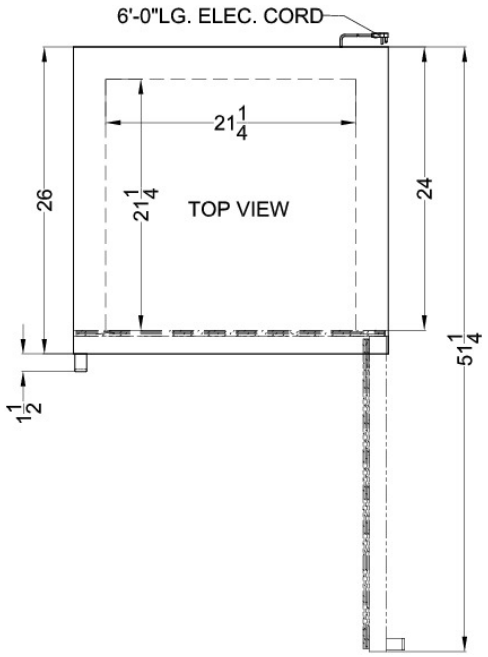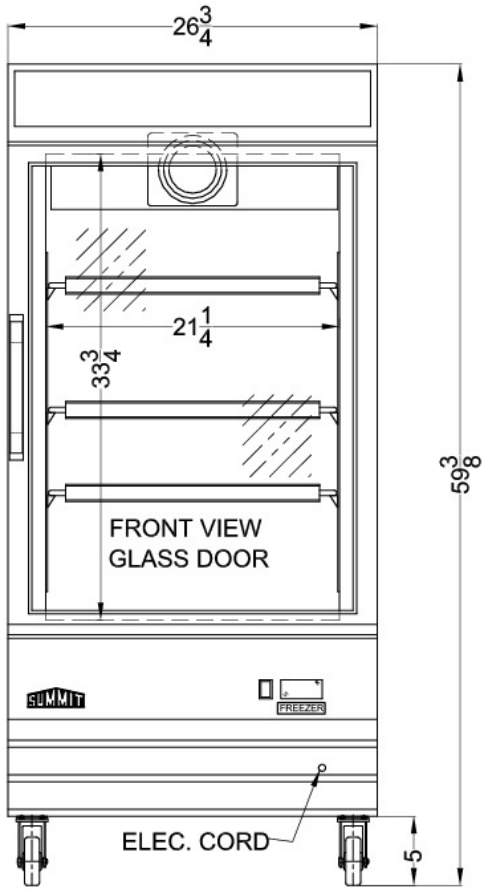
Overview	
Height of Cabinet	59.38" (151 cm)
Width	26.75" (68 cm)
Depth	26.0" (66 cm)
Depth with Handle	27.5" (70 cm)
Depth with door at 90°	51.25" (130 cm)
Capacity	9.0 cu.ft. (255 L)
Defrost Type	Frost-Free
Door	Glass
Cabinet	White
US Electrical Safety	ETL
Canadian Electrical Safety	ETL-C
Sanitation	ETL-S
Amps	4.2
Voltage/Frequency	115 V AC/60 Hz
Weight	198.0 lbs. (90 kg)
Parts & Labor Warranty	1 Year
Compressor Warranty	5 Years
UPC	761101060897
Freezer	
Door Swing	RHD
Reversible	No
Interior Height	33.25" (84 cm)
Interior Width	21.25" (54 cm)
Interior Depth	21.25" (54 cm)
Shelf Type	Wire
Shelf Qty	3
Adjustable Shelves	Yes
Thermostat Type	Digital
Interior Light	Yes
Fan Type	Interior
Refrigerant Type	R290a
Refrigerant Amount	40.5 oz.
High Side PSI	320.0
Low Side PSI	180.0
Wheels	4
Temperature Range	-4 to 5°F