CL64FDSS

34.5" x 23.88" x 23.88" (H x W x D)

Dual zone wine/craft beer center for built-in or freestanding use, with French door swing, stainless steel construction, and digital controls

Highlights:

French door swing with independent temperature zones for red and white wine or craft beer storage

Flexible design allows built-in or freestanding use in 24" wide spaces

Both zones are illuminated by elegant LED lighting

Product Features:

Stainless steel exterior	Complete stainless steel construction ensures lasting durability and style
Two temperature zones	Independent temperature zones allow separate storage of wine and craft beer under the proper temperature conditions
Built-in capable	Make the best use of space by installing your unit under the counter and flush with other cabinets
French door swing	Two side-by-side doors with French door opening
Automatic defrost	Reduced maintenance with auto defrost system
Adjustable glass shelves	Frosted glass shelves with silver trim can accommodate up to 60 12 oz. cans of your favorite craft beer
Slide-out wine shelves	6 wine shelves are ideally sized to store up to 21 standard 750 ml bottles, with a silver trimmed accent for an added touch of style
Digital thermostat	Intuitive touch controls located inside the unit make temperature adjustment simple, with a temperature display in Celsius or Fahrenheit
LED lighting	Recessed LED lighting offers an elegant and efficient view of the interior

SUMMIT APPLIANCE DIVISION, FELIX STORCH, INC. | ISO 9001:2015 Certified
770 Garrison Avenue Bronx, NY 10474 USA **TEL** 718-893-3900 **FAX** 844-478-8799 info@summitappliance.com **www.summitappliance.com**

CL64FDSS Specifications:

Overview	
Height of Cabinet	34.5" (88 cm)
Width	23.88" (61 cm)
Depth	23.88" (61 cm)
Depth with Handle	25.5" (65 cm)
Depth with door at 90°	34.5" (88 cm)
Capacity	5.1 cu.ft. (144 L)
Bottles	21 bottles
Defrost Type	Automatic
Door	Stainless Steel
Cabinet	Stainless Steel
US Electrical Safety	ETL
Canadian Electrical Safety	ETL-C
Amps	1.5
Voltage/Frequency	115 V AC/60 Hz
Weight	101.0 lbs. (46 kg)
Parts & Labor Warranty	1 Year
Compressor Warranty	5 Years
UPC	761101050867
Wine Cellar	
Number of Zones	2
Door Swing	French
Adjustable Shelves	Yes
Shelf Type	Glass and Wire
Shelf Qty	9
Thermostat Type	Digital
Interior Light	Yes
Fan Type	Interior and Exterior
Refrigerant Type	R600a
Refrigerant Amount	1.41 oz.
High Side PSI	277.0
Low Side PSI	103.0
Interior Height 1	26.0" (66 cm)
Interior Width 1	9.38" (24 cm)
Interior Depth 1	18.0" (46 cm)
Compressor Step Height	4.38" (11 cm)
Compressor Step Width	9.38" (24 cm)
Compressor Step Depth	5.5" (14 cm)
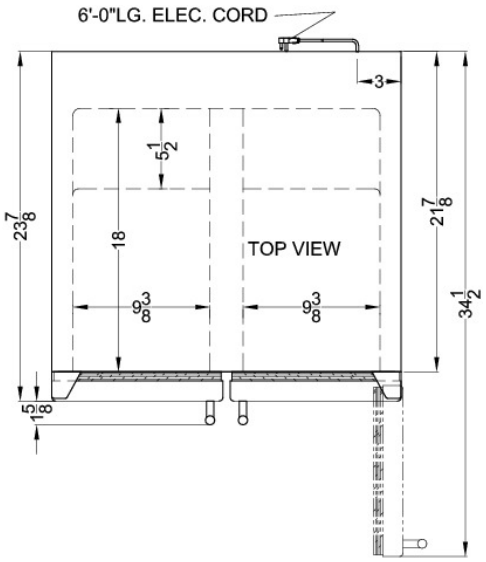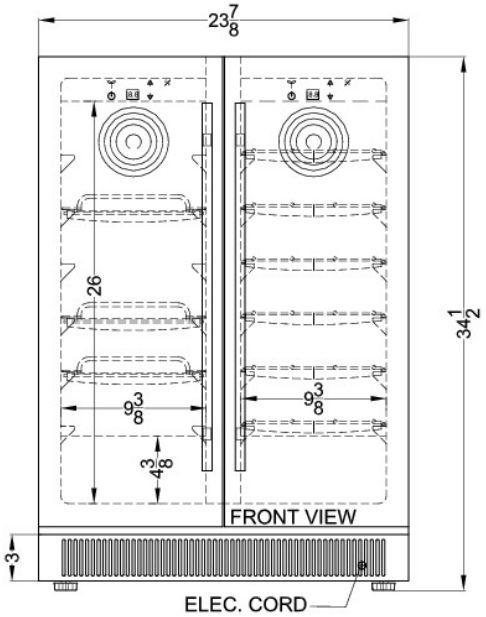
Level Legs	2
Wheels	4
Temperature Range	41 to 64ºF
Interior Height 2	26.0" (66 cm)
Interior Width 2	9.38" (24 cm)
Interior Depth 2	18.0" (46 cm)