FRBW52D

67.25" x 23.63" x 25" (H x W x D)

Fully assembled warming cabinet & two-drawer all-freezer stacked combination

Highlights:

Innovative energy-saving design lets the lower freezer power the upper warming cabinet

Perfectly sized with a 24" footprint and flush back design

Frost-free operation ensures minimum user maintenance in the freezer compartment

Product Features:

Slim 24" footprint	Ideally sized for use in space-challenged facilities
Fully assembled	Unit ships completely assembled for easy installation
Energy efficient design	Warming cabinet is partially powered by the lower freezer, offering huge energy savings for your facility by having a single plug appliance serve two functions
Stainless steel exterior	Both cabinets feature a complete stainless steel wrap for lasting durability and easy cleaning
Stainless steel interior (warming cabinet)	Offers lasting durability and improved sanitary conditions
Stainless steel trimmed double pane tempered glass door	Heat-safe door offers a full view of interior blanket inventory
Adjustable cantilevered shelves (warming cabinet)	Top unit offers a variety of interior configurations with flexible cantilevered shelving in chrome
Foamed-in-place cabinet	Ensures the interior is efficiently insulated
Factory installed lock	Warming cabinet includes front lock for added security

SUMMIT APPLIANCE DIVISION, FELIX STORCH, INC. | ISO 9001:2015 Certified
770 Garrison Avenue Bronx, NY 10474 USA **TEL** 718-893-3900 **FAX** 844-478-8799 info@summitappliance.com **www.summitappliance.com**

SUMMIT | PURETHERM WARMING CABINET

FRBW52D Specifications:

Overview	
Height of Cabinet	67.25" (171 cm)
Width	23.63" (60 cm)
Depth	25.0" (64 cm)
Depth with Handle	26.88" (68 cm)
Depth with door at 90°	45.5" (116 cm)
Capacity	7.4 cu.ft. (210 L)
Defrost Type	Frost-Free
Door	Glass/SS
Cabinet	Stainless Steel
US Electrical Safety	ETL
Canadian Electrical Safety	ETL-C
Amps	1.5
Voltage/Frequency	115 V AC/60 Hz
Weight	300.0 lbs. (136 kg)
Parts & Labor Warranty	1 Year
Compressor Warranty	5 Years
UPC	761101050218
Warming & Cooling Cabinet	
Top Unit	Warming Cabinet
Door Swing (Top Unit)	RHD
Reversible (Top Unit)	Factory Reversible
Adjustable Shelves (Top Unit)	Yes
Shelf Type (Top Unit)	Chrome
Shelf Quantity (Top Unit)	2
Thermostat Type (Top Unit)	Digital
Interior height (Top Unit)	22.25" (57 cm)
Interior Width (Top Unit)	20.0" (51 cm)
Interior Depth (Top Unit)	17.5" (44 cm)
Capacity (Top Unit)	4.0 cu.ft. (113 L)
Refrigeration Unit	All-Freezer
Door Swing (Bottom Unit)	Drawer
Interior Light (Bottom Unit)	Yes
Thermostat Type (Bottom Unit)	Digital
Interior Height (Bottom Unit)	19.25" (49 cm)
Interior Width (Bottom Unit)	17.25" (44 cm)
Interior Depth (Bottom Unit)	15.5" (39 cm)
Capacity (Bottom Unit)	3.4cu.ft.
Refrigerant Type	R134a
Fan Type	Interior and Exterior

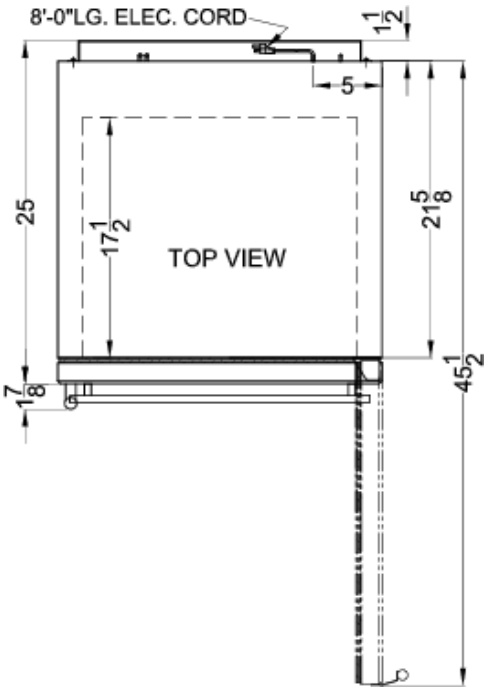

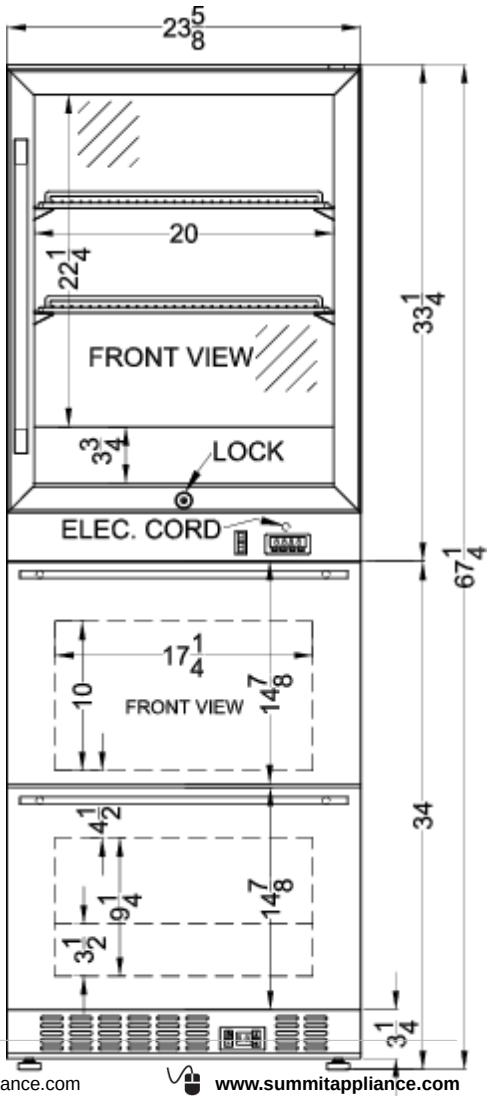

SUMMIT APPLIANCE DIVISION, FELIX STORCH, INC. | ISO 9001:2015 Certified
770 Garrison Avenue Bronx, NY 10474 USA **TEL** 718-893-3900 **FAX** 844-478-8799 info@summitappliance.com **www.summitappliance.com**