SCR1401CSS

69.75" x 23.63" x 23.75" (H x W x D)

Full-size commercial beverage center with stainless steel interior, self-closing glass door, and stainless steel wrapped cabinet

Highlights:

Commercially approved to NSF-7 standards

Stainless steel interior and exterior cabinet for lasting durability

Uniquely sized with a slim 24 inch footprint

Product Features:

Commercially listed	Design meets UL-471 commercial standards and is ETL-S listed to NSF-7 standards for commercial use
Slim fit	Just 24" wide and deep for an easy fit in any setting
Frost-free operation	No-frost convenience for reduced user maintenance
Stainless steel interior	Walls are constructed from stainless steel for added strength and easy cleanup
Double pane tempered glass door	Heat-safe glass door with stainless steel trim offers full display all the way down to the floor
Self-closing door	Door will automatically close when left ajar, preventing items from accidentally being exposed to ambient temperatures
Digital thermostat	Electronic controls for precise temperature management, with a readout viewable in Celsius or Fahrenheit
Cantilevered shelving	Adjustable shelving accommodates virtually any size with convenient cantilevered system
Recessed LED lighting	On/off button to illuminate stored products with an attractive and energy efficient glow

SCR1401CSS Specifications:

Overview	
Height of Cabinet	69.75" (177 cm)
Width	23.63" (60 cm)
Depth	23.75" (60 cm)
Depth with Handle	25.63" (65 cm)
Depth with door at 90°	46.75" (119 cm)
Capacity	12.6 cu.ft. (357 L)
Defrost Type	Frost-Free
Door	Glass
Cabinet	Stainless Steel
US Electrical Safety	ETL
Canadian Electrical Safety	ETL-C
Sanitation	ETL-S
Amps	1.7
Weight	185.0 lbs. (84 kg)
Parts & Labor Warranty	1 Year
Compressor Warranty	5 Years
UPC	761101063690
Refrigerator Features	
Sabbath Mode	Yes
Door Swing	RHD
Reversible	No
Shelf Type	Chrome
Shelf Qty	6
Adjustable Shelves	Yes
Thermostat Type	Digital
Fan Type	Interior
Refrigerant Type	R600a
Refrigerant Amount	1.76oz.
High Side PSI	270.0
Low Side PSI	105.0
Level Legs Qty	4
Interior Light	Yes
Temperature Range	36 to 68ºF
Sound Level	35.7 dB
Dimensions	
Interior Height	59.75" (152 cm)
Interior Width	20.0" (51 cm)

Interior Depth	16.5" (42 cm)
Compressor Step Height	4.5" (11 cm)
Compressor Step Width	4.5" (11 cm)
Compressor Step Depth	4.5" (11 cm)

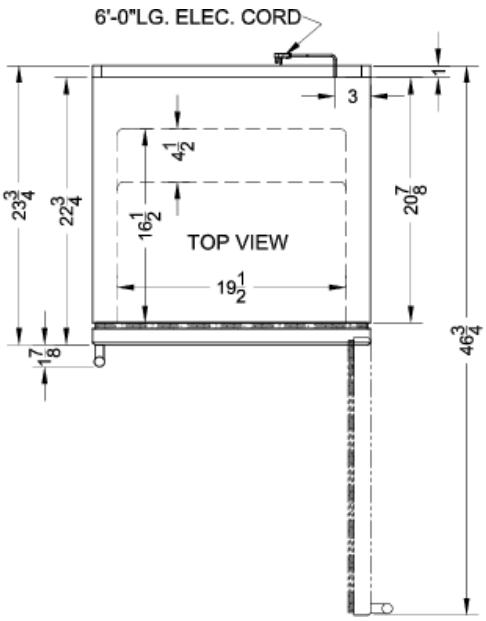

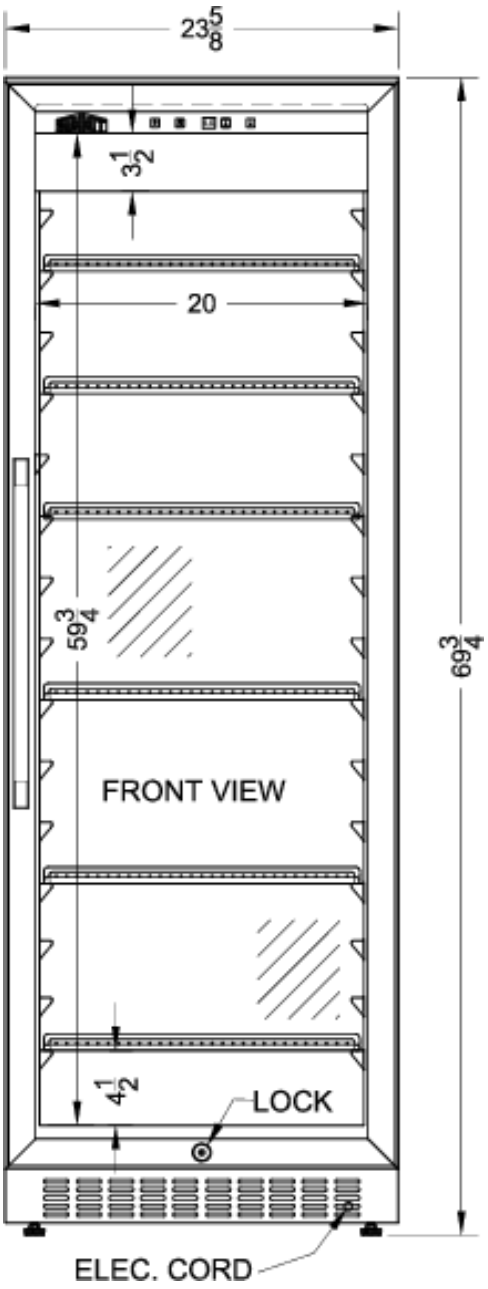

SUMMIT APPLIANCE DIVISION, FELIX STORCH, INC. | ISO 9001:2015 Certified
770 Garrison Avenue Bronx, NY 10474 USA **TEL** 718-893-3900 **FAX** 844-478-8799 info@summitappliance.com **www.summitappliance.com**