accucold

FS24L

20" x 18.5" x 17.63" (H x W x D)

Compact all-freezer for general purpose use, manual defrost with lock

Highlights:

Compact "cube" size is ideal for use on top of counters

Factory installed lock provides security you can count on

Designed for general purpose use in medical and scientific facilities

Product Features:

Compact size	Convenient "cube" shape is ideal for use on top of counters
Factory installed lock	Keyed lock for a secure interior
Manual defrost	Static cooling system
One-piece interior liner	Seamless interior for easier cleanup
Removable shelf	Includes one wire shelf for easier storage
Reversible door	User reversible door swing for added flexibility
Adjustable thermostat	Dial thermostat for easy temperature management
Flat door liner	Designed to comply with CDC guidelines
100% CFC Free	Environmentally friendly design with no ozone-damaging chemicals

SUMMIT APPLIANCE DIVISION, FELIX STORCH, INC. | ISO 9001:2015 Certified
770 Garrison Avenue Bronx, NY 10474 USA **TEL** 718-893-3900 **FAX** 844-478-8799 info@summitappliance.com **www.summitappliance.com**

accucold

FS24L Specifications:
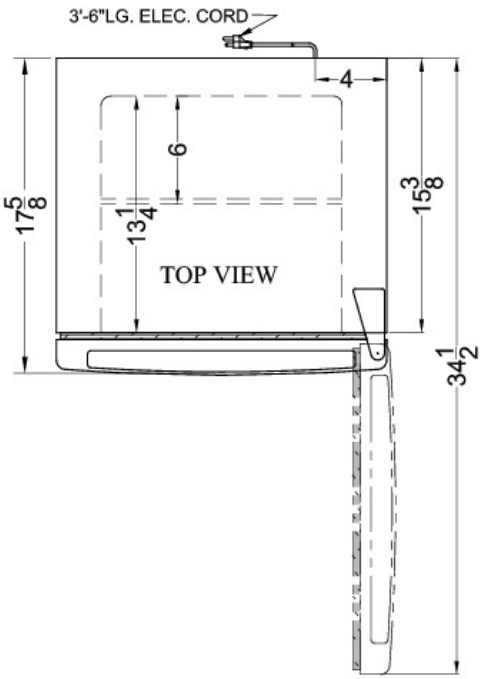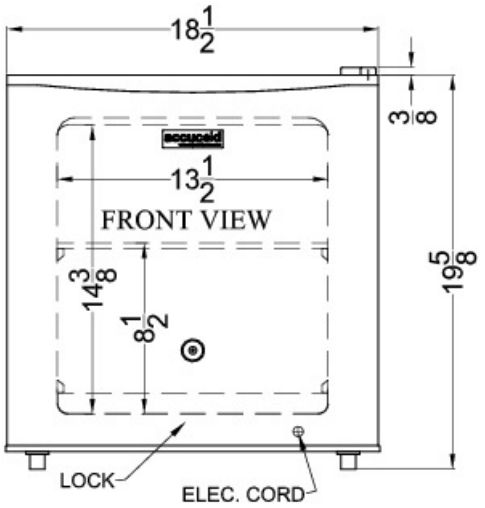
Overview	
Height of Cabinet	19.63" (50 cm)
Height to Hinge Cap	20.0" (51 cm)
Width	18.5" (47 cm)
Depth	17.63" (45 cm)
Depth with door at 90°	34.5" (88 cm)
Capacity	1.4 cu.ft. (40 L)
Defrost Type	Manual
Door	White
Cabinet	White
US Electrical Safety	ETL
Canadian Electrical Safety	ETL-C
Amps	0.8
Voltage/Frequency	115 V AC/60 Hz
Weight	31.0 lbs. (14 kg)
Parts & Labor Warranty	1 Year
Compressor Warranty	5 Years
UPC	761101033792
Freezer	
Door Swing	RHD
Reversible	Yes
Interior Height	14.38" (37 cm)
Interior Width	13.5" (34 cm)
Interior Depth	13.25" (34 cm)
Shelf Type	Wire
Shelf Qty	1
Thermostat Type	Dial
Refrigerant Type	R600a
Refrigerant Amount	0.8 oz.
High Side PSI	110.0
Low Side PSI	70.0
Level Legs	2
Compressor Step Height	8.5" (22 cm)
Compressor Step Width	13.5" (34 cm)
Compressor Step Depth	6.0" (15 cm)