WTM7212KWSSW

34.5" x 24" x 24" (H x W x D)

DISCONTINUED

Highlights:

34 1/8" H x 22 3/8" W x 23" D cutout dimensions fit many pre-existing kitchen spaces

Stainless steel doors with professional towel bar handles

Lower broiler compartment included

Product Features:

Stainless steel doors	Professional stainless steel construction on the oven/broiler drawers and top manifold
Professional towel bar handles	Curved handles in brushed stainless steel
Digital clock and timer	Added convenience for easier cooking
Lower broiler compartment	Drop-down door with lower section for separate broiling
Broiler pan included	Two-piece porcelain broiler tray with grease well
Electronic/gas spark ignition	Standard on SUMMIT wallovens
Oven window	Provides a convenient view into the oven interior
Interior light	Oven includes light with exterior on/off switch
Porcelain construction	Interior oven is constructed from long-lasting porcelain that is easy to clean

SUMMIT APPLIANCE DIVISION, FELIX STORCH, INC. | ISO 9001:2015 Certified
770 Garrison Avenue Bronx, NY 10474 USA **TEL** 718-893-3900 **FAX** 844-478-8799 info@summitappliance.com **www.summitappliance.com**

SUMMIT

WTM7212KWSSW Specifications:

Overview	
Height of Cabinet	34.5" (88 cm)
Width	24.0" (61 cm)
Depth	24.0" (61 cm)
Capacity	2.92 cu.ft. (83 L)
Door	Stainless Steel
US Electrical Safety	UL
Weight	170.0 lbs. (77 kg)
Parts & Labor Warranty	1 Year
UPC	761101024233
Gas Walloven	
Ignition	Spark
LP Convertible	No
Controls	Dial
Oven Light	Yes
Cooking Timer	Yes
Cleaning Type	Manual
Oven Rack Qty	2
Oven Window	Yes
Cutout Height	34.18" (87 cm)
Cutout Width	22.38" (57 cm)
Cutout Depth	23.0" (58 cm)

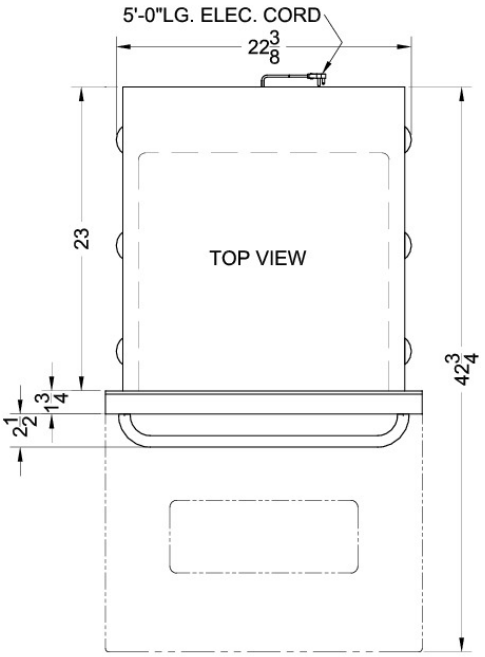

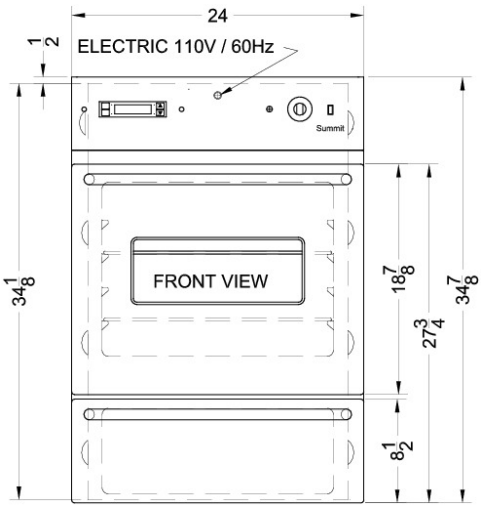

SUMMIT APPLIANCE DIVISION, FELIX STORCH, INC. | ISO 9001:2015 Certified
770 Garrison Avenue Bronx, NY 10474 USA **TEL** 718-893-3900 **FAX** 844-478-8799 info@summitappliance.com **www.summitappliance.com**