WNM210P

40" x 30" x 24" (H x W x D)

30" wide open burner gas range in white with battery start ignition; made in the USA

Highlights:

30" wide gas range made in the USA

Battery start ignition is ideal for locations without standard power access

Porcelain construction on range top and oven for true durability

Product Features:

Made in the USA	Designed and constructed domestically
30 inch wide range	Standard size ideal for most kitchens
24 inch depth	Shallower fit is ideal for L-shaped and galley kitchens
Battery start ignition	Uses a 9V battery to ignite the oven and burners, providing a convenient off-grid solution to kitchens previously using pilot lights when no electricity is available
Natural gas design	Set for use with natural gas connection. To convert for propane use, add Kit LPP
4 open burners	9000 BTU burners with built-in enamel grates to meet most cooking needs
Broiler compartment	Lower drop-down compartment for separate broiling with even heat distribution
Recessed oven door	Smart design limits the depth and protects adjacent cabinets
Upfront controls	Push-to-turn knobs offer easier, safer access, preventing users from reaching over hot burners to adjust

SUMMIT APPLIANCE DIVISION, FELIX STORCH, INC. | ISO 9001:2015 Certified
770 Garrison Avenue Bronx, NY 10474 USA **TEL** 718-893-3900 **FAX** 844-478-8799 info@summitappliance.com **www.summitappliance.com**

SUMMIT

WNM210P Specifications:
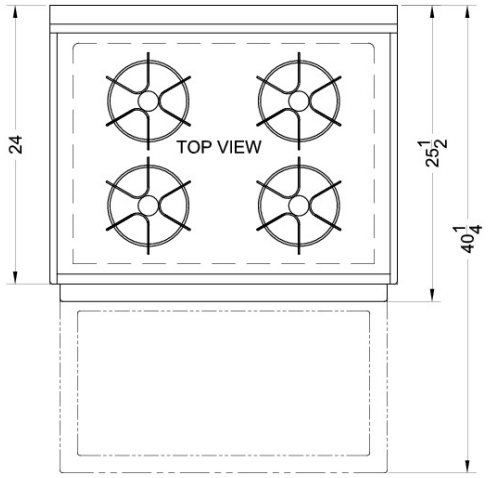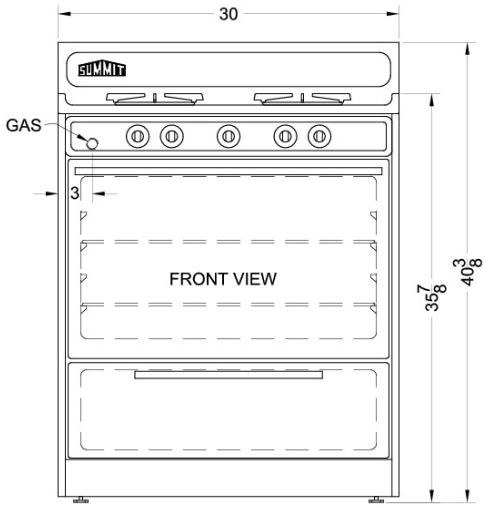
Overview	
Height of Cabinet	40.0" (102 cm)
Width	30.0" (76 cm)
Depth	24.0" (61 cm)
Door	White
Cabinet	White
Weight	165.0 lbs. (75 kg)
Shipping Weight	172.0 lbs. (78 kg)
Parts & Labor Warranty	1 Year
UPC	761101028330
Gas Range	
Ignition	Battery Start
LP Convertible	With Kit LP Accessory
Oven Capacity	3.7 cu.ft
Cooktop Surface	Porcelain
Burner Type	Open
Number of Burners	4
Burner #1 BTU	9000.0
Burner #2 BTU	9000.0
Burner #3 BTU	9000.0
Burner #4 BTU	9000.0
Burner Controls	Dial
Oven Controls	Dial
Cleaning Type	Manual
Oven Interior Height	14.0" (36 cm)
Oven Interior Width	19.0" (48 cm)
Oven Interior Depth	21.0" (53 cm)
Broiler Location	Below Oven
Oven Door	White