SPR7OSBI

33.5" x 23.75" x 25" (H x W x D)

DISCONTINUED: Replaced by commercial model SPR7OSST

Highlights:

U.L. approved for outdoor use with a weatherproof design

304 grade stainless steel exterior stands up to nature in every season

Flexible design allows built-in or freestanding use in 24" wide spaces

Product Features:

U.L. approved for outdoor use	Weatherproof design rated safe for outdoor operation
304 grade stainless steel exterior	Complete stainless steel construction for easy durability in the outdoors
Built-in capable	Make the best use of space by installing your unit under the counter and flush with other cabinets
Automatic defrost	Reduced maintenance with auto defrost system
Factory installed lock	Keep contents secure with a key lock on the door
Ground Fault Circuit Interrupter	Our integrated GFCI exceeds U.L. requirements for safety by protecting your unit from shocks and circuit breaks
Professional towel bar handle	A curved stainless steel handle adds function and elegance, providing more room for a comfortable grip
Interior light	Turn the light on and off with a convenient rocker switch
Adjustable shelves	Rearrange your refrigerator space to accommodate all shapes and sizes or remove shelves for a simple clean-up

SUMMIT APPLIANCE DIVISION, FELIX STORCH, INC. | ISO 9001:2015 Certified
770 Garrison Avenue Bronx, NY 10474 USA **TEL** 718-893-3900 **FAX** 844-478-8799 info@summitappliance.com **www.summitappliance.com**

SPR7OSBI Specifications:
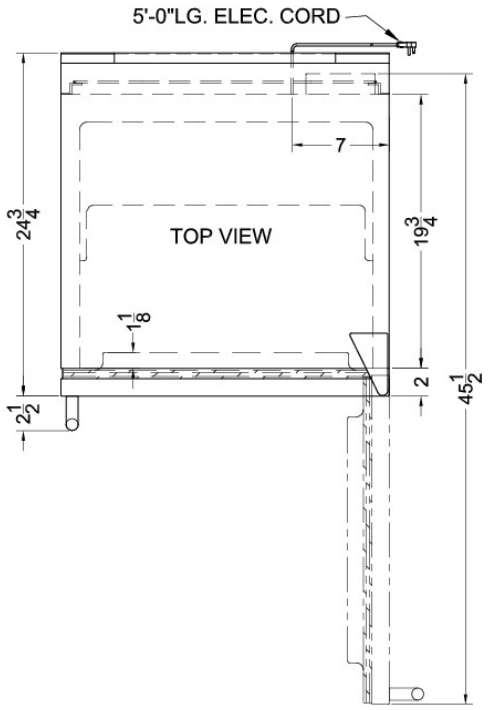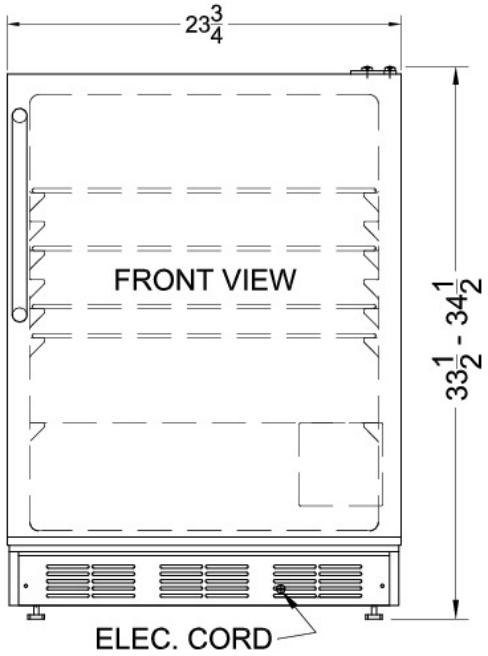
Overview	
Height of Cabinet	33.5" (85 cm)
Width	23.75" (60 cm)
Depth	25.0" (64 cm)
Depth with Handle	27.5" (70 cm)
Capacity	5.5 cu.ft. (156 L)
Defrost Type	Automatic
Door	Stainless Steel
Cabinet	Stainless Steel
US Electrical Safety	UL
Energy Usage/Year	405.0kWh/year
Voltage/Frequency	115 V AC/60 Hz
Parts & Labor Warranty	1 Year
Compressor Warranty	5 Years
UPC	761101021881
Refrigerator Features	
Door Swing	RHD
Reversible	Factory Reversible
Height Adjustable	1
Crisper Finish	Opaque
Crisper Cover	Glass
Shelf Type	Glass
Shelf Qty	3
Adjustable Shelves	Yes
Thermostat Type	Dial
Fan Type	Exterior
Interior Light	Yes