accucold

FS408BLBIADA

32.5" x 19.25" x 21.38" (H x W x D)

ADA Compliant 20" wide built-in undercounter all-freezer for general purpose use, -20º C capable with a lock and black finish

Highlights:

32" height fits under lower ADA compliant counters

Flexible design allows built-in or freestanding use in 20" wide spaces

Factory installed lock provides security you can count on

Product Features:

ADA compliant	32" high to fit under lower ADA compliant counters
Slim 20" width	2.8 cu.ft. capacity inside a slim footprint
Built-in capable	Make the best use of space by installing your appliance under the counter
Fully finished black cabinet	Allows the unit to be used freestanding
Factory installed lock	Top-mounted for convenient security
Reversible door	Keep your options flexible with a reversible door that is easy to switch when your arrangement changes
Manual defrost	Efficient performance with reliable temperature stability
-20º capable	Low temperature capability ideal for certain sensitive items
Pull-out drawers	Four clear baskets for convenient and separated storage

SUMMIT APPLIANCE DIVISION, FELIX STORCH, INC. | ISO 9001:2015 Certified
770 Garrison Avenue Bronx, NY 10474 USA **TEL** 718-893-3900 **FAX** 844-478-8799 info@summitappliance.com **www.summitappliance.com**

accucold

FS408BLBIADA Specifications:
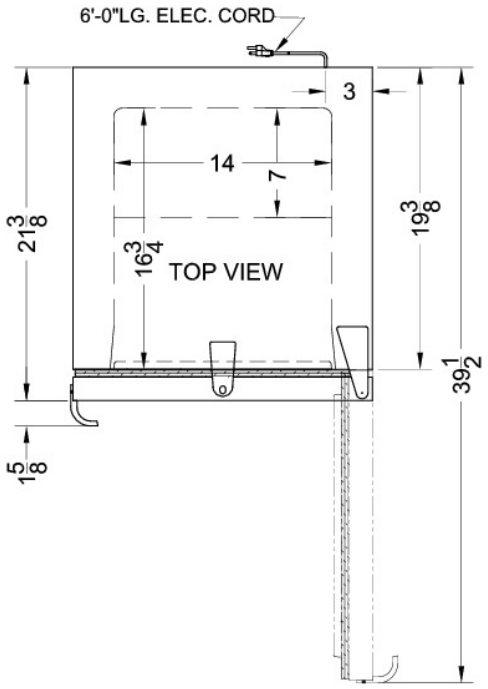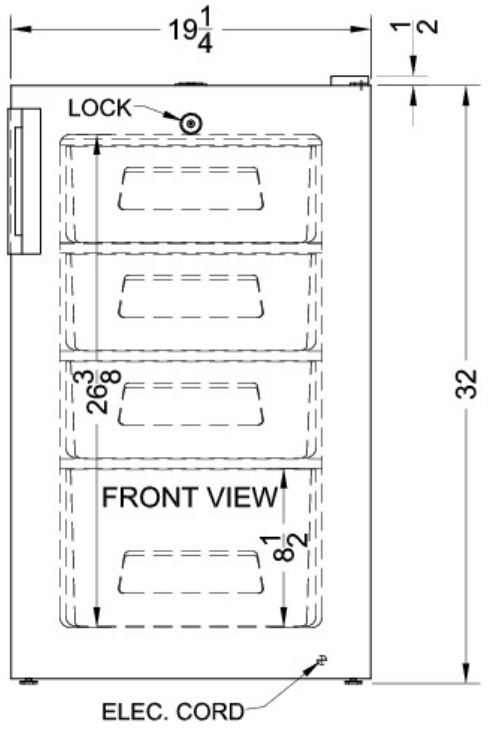
Overview	
Height of Cabinet	32.0" (81 cm)
Height to Hinge Cap	32.5" (83 cm)
Width	19.25" (49 cm)
Depth	21.38" (54 cm)
Depth with Handle	23.0" (58 cm)
Depth with door at 90°	39.5" (100 cm)
Capacity	2.8 cu.ft. (79 L)
Defrost Type	Manual
Door	Black
Cabinet	Black
US Electrical Safety	ETL
Canadian Electrical Safety	ETL-C
Amps	1.6
Voltage/Frequency	115 V AC/60 Hz
Weight	64.0 lbs. (29 kg)
Parts & Labor Warranty	1 Year
Compressor Warranty	5 Years
UPC	761101028972
Freezer	
Door Swing	RHD
Reversible	Yes
Interior Height	26.38" (67 cm)
Interior Width	14.0" (36 cm)
Interior Depth	16.75" (43 cm)
Thermostat Type	Dial
Refrigerant Type	R134a
Refrigerant Amount	3.0 oz.
High Side PSI	210.0
Low Side PSI	105.0
Level Legs	2
Interior Drawers	Yes
Drawers Qty	4