THERMOELECTRIC BUFFET CHILLER

Model: STC1B3

Instruction Manual

Please read carefully and follow all safety rules and operating instructions.

Copy Serial Number from back of unit here:

_____

FELIX STORCH, INC.
Summit Appliance Division
770 Garrison Avenue
Bronx, New York 10474
www.summitappliance.com

Introduction

SUMMIT STC1B3 is a thermoelectric buffet chiller designed to display and cool small items in a convenient portable design.

This jet black cooler is sized for use on top of counters and includes a digital thermostat with a temperature range of 46º to 66ºF. Two interior fans ensure cool air is evenly distributed throughout the interior, while the thermoelectric cooling technology offers a quieter performance than standard compressor-based refrigeration.

The STC1B3 features a dishwasher-safe top frame sized to accept three quarter-sized steam table pans (not included) or alternatively, one half-sized and one quarter-sized pan. The design makes it ideal for keeping buffet items such as butter packets, creamers, and cream cheese at a cool serving temperature, or for storing fresh foods for short-term use.

Table of Contents

Introduction 1
Important Safety Instructions 2
Location of Parts 3
Technical Data 3
Installation Instructions 4
Electrical Connection 4
Operating the Buffet Chiller 5
Optional Parts 5
Care and Maintenance 5
    Cleaning the Buffet Chiller
    Moving the Buffet Chiller to a Different Location
Troubleshooting 6
Limited Warranty 7

IMPORTANT SAFETY INSTRUCTIONS

⚡ WARNING ⚡	To reduce the risk of fire, electrical shock, or injury when using your appliance, follow these basic precautions:

- Read all instructions before using the Buffet Chiller.
- Never allow children to operate, play with, or crawl inside the appliance.
- Never clean appliance parts with flammable fluids. The fumes can create a fire hazard or explosion.
- Do not store or use gasoline or any other flammable vapors and liquids in the vicinity of this or any other appliance. The fumes can create a fire hazard or explosion.
- Do not store foods in the Buffet Chiller for longer than a few hours, as the interior temperature may not get cool enough to prevent spoilage.

- **DANGER !** *Risk of Child Entrapment*
  - √ Junked or abandoned appliances are dangerous … even if they “just sit in the garage a few days”.
  - √ **Before you throw away your old refrigerator:** Take off the doors but leave the shelves in place so that children may not easily climb inside.

– *SAVE THESE INSTRUCTIONS* –

Location of Parts

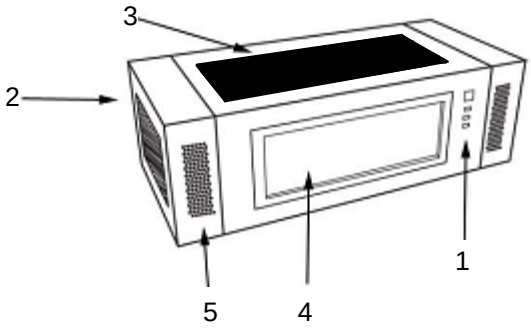

1. Display
   Increase temperature
   Reduce temperature
   Interior light on/off
2. Fan ventilation
3. Frame and food storage area
4. Double-glass window
5. Ventilation slots

Technical Information

Model No.	STC1B3
Capacity	0.78 cu. ft. (22L)
Voltage	110V
Current	2A (77°F/25°C)
Protection Class	1
Frequency	60Hz
Climate Class	SN; N
Input Power	140W
Power Consumption (kWh/24h)	1.1 (59°F/15°C)
Max Difference between ambient and interior Temperatures	31F° (17C°)
Temperature Control Range	46-66°F (8-18°C)
Weight	26.0 lbs
Unit size (W×D×H)	28.88" x 12.75" x 9.38"
Packing size (W×D×H)	31.0" x 14.8" x 11.2"

Installation Instructions

Before using the Buffet Chiller:

- Remove the exterior and interior packing.
- Clean the interior of the unit as described on page 5.
- Place your appliance on a surface that is strong enough to support it when it is fully loaded. Be sure the plastic frame is in place and that the unit is level.
- Position the unit away from direct sunlight and sources of heat (oven, heater, radiator, etc.). Direct sunlight may affect the acrylic coating and heat sources may increase electrical consumption. Extreme cold or hot ambient temperatures may also cause the appliance to perform improperly.
- This Buffet Chiller is not designed for placement in a garage or basement. It is designed for indoor use.

STC1B3 shown with optional lid and two pans (not supplied)

Electrical Connection

⚡ WARNING ⚡

Improper use of the grounding plug can result in the risk of electrical shock. If the power cord is damaged, have it replaced by an authorized service center.

This unit requires a standard 110V-60HZ electrical outlet with 3-pin plug.

The unit should be properly grounded for your safety. The power cord is equipped with a 3-pin plug which mates with 3-pin wall outlets to minimize the possibility of electrical shock. Do not under any circumstances cut or remove the ground wire from the power cord supplied.

Use of extension cords is not recommended.

To prevent accidental injury, secure the cord behind the Buffet Chiller so that it is not left exposed or dangling.

Operating the Buffet Chiller

It is recommended that you install the Buffet Chiller in a place where the ambient temperature is between 50 and 80°F (10-26°C). If the ambient temperature is above or below these recommended temperatures, the performance of the unit may be affected. For example, placing it in extreme cold or hot conditions may cause the interior temperature to fluctuate. The range of 46-66°F (8-18°C) may not be reached.

The temperature may fluctuate depending on whether or not the interior light is on or off, so do not leave the light on longer than necessary.

How to use the Display Panel:
The display normally shows the current temperature inside the Buffet Chiller. You can change the set temperature by pressing the "▲" and "▼" buttons. Each press of a button changes the temperature by one degree within the range of 44-66°F.

The third button turns the interior light on or off.

Optional Parts

The followings parts are available from Summit, but are not standard equipment with the STC1B3 Buffet Chiller. Call Summit Customer Assistance at **1-800-932-4267**.

- STC1Lid – Lid to cover upper surface of Buffet Chiller
- STC1Option2 – Frame for holding 2 one-quarter size steam table pans
- STC1Option5 – Frame for holding 5 one-ninth size steam table pans

Please note that pans are not currently available from Summit, but may be purchased at most restaurant supply houses.

Care And Maintenance

Cleaning the Buffet Chiller

- Unplug the Buffet Chiller and remove the food containers and frame.
- Wash the inside with a solution of warm water and baking soda (about 2 tablespoons of baking soda to a quart of water). Wipe with a soft cloth dampened in clean water and allow to dry thoroughly. The frame is safe for cleaning in a dishwasher.
- Replace the frame and food containers.
- The outside of the appliance should be cleaned with a solution of mild detergent in warm water.

Moving the Buffet Chiller to a Different Location

- Remove all the food containers.
- Keep the appliance in an upright position during transportation.

Troubleshooting

You can solve many common appliance problems easily, saving you the cost of a possible service call. Try the suggestions below to see if you can solve the problem before calling a service center.

PROBLEM	POSSIBLE CAUSE
Buffet Chiller does not operate.	Not plugged in. Incorrect voltage. Circuit breaker tripped or fuse blown.
Buffet Chiller is not cold enough.	Check the temperature control setting. External environment may require a colder setting.
The light does not work.	Check with the service center.
The Buffet Chiller seems to make too much noise.	Check the fans.
No LED display	There is a problem with the plug. Main control board does not work. PCB problem. Contact service center.
LED display error	Temperature setting is out of range.
Buttons are not functional.	Temperature controller panel is damaged.

SERVICE & IMPORTANT NOTICE

Upon receipt and inspection of the unit, check if the power cord is damaged. If so, it must be replaced.

For additional information or questions, please call our Customer Service line at **1-800-932-4267**, or contact us on the web at **www.summitappliance.com/support**.

WARNING: Do not use where children can touch the unit. Do not let children use the unit by themselves.

Limited Warranty

ONE-YEAR LIMITED WARRANTY

Within the 48 contiguous United States, for one year from the date of purchase, when this appliance is operated and maintained according to instructions attached to or furnished with the product, warrantor will pay for factory-specified parts and repair labor to correct defects in materials or workmanship. Service must be provided by a designated service company. Outside the 48 states, all parts are warranted for one year from manufacturing defects. Plastic parts, shelves and cabinets are warranted to be manufactured to commercially acceptable standards, and are not covered from damage during handling or breakage.

ITEMS WARRANTOR WILL NOT PAY FOR:

1. Service calls to correct the installation of your appliance, to instruct you how to use your appliance, to replace or repair fuses or to correct wiring or plumbing.
2. Service calls to repair or replace appliance light bulbs or broken shelves. Consumable parts (such as filters) are excluded from warranty coverage.
3. Damage resulting from accident, alteration, misuse, abuse, fire, flood, acts of God, improper installation, installation not in accordance with electrical or plumbing codes, or use of products not approved by warrantor.
4. Replacement parts or repair labor costs for units operated outside the United States.
5. Repairs to parts or systems resulting from unauthorized modifications made to the appliance.
6. Expenses for travel and transportation for product service in remote locations.
7. The removal and reinstallation of your appliance if it is installed in an inaccessible location or is not installed in accordance with published installation instructions.

DISCLAIMER OF IMPLIED WARRANTIES – LIMITATION OF REMEDIES

CUSTOMER'S SOLE AND EXCLUSIVE REMEDY UNDER THIS LIMITED WARRANTY SHALL BE PRODUCT REPAIR AS PROVIDED HEREIN. IMPLIED WARRANTIES, INCLUDING WARRANTIES OF MERCHANTABILITY OR FITNESS FOR A PARTICULAR PURPOSE, ARE LIMITED TO ONE YEAR. WARRANTOR SHALL NOT BE LIABLE FOR INCIDENTAL OR CONSEQUENTIAL DAMAGES. SOME STATES DO NOT ALLOW THE EXCLUSION OR LIMITATION OF INCIDENTAL OR CONSEQUENTIAL DAMAGES, OR LIMITATIONS ON THE DURATION OF IMPLIED WARRANTIES OF MERCHANTABILITY OR FITNESS, SO THESE EXCLUSIONS OR LIMITATIONS MAY NOT APPLY TO YOU. THIS WARRANTY GIVES YOU SPECIFIC LEGAL RIGHTS AND YOU MAY ALSO HAVE OTHER RIGHTS, WHICH VARY FROM STATE TO STATE.

WARNING! This product may contain chemicals known to the state of California to cause cancer or birth defects or other reproductive harm. For more information, visit: www.summitappliance.com/prop65

Chemicals known by the manufacturer to be present in this product in concentrations higher than threshold limits: NONE.

FELIX STORCH, INC.
770 Garrison Avenue
Bronx, NY 10474
Phone: (718) 893-3900
Fax: (718) 842-3093
www.summitappliance.com

SUMMIT

For parts and accessory ordering, troubleshooting and helpful hints, visit:
www.summitappliance.com/support