168-BOTTLE WINE CELLAR

Model SWC1925

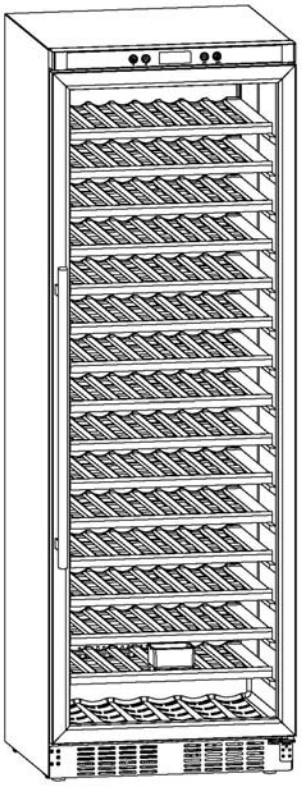

Instruction Manual

Please read carefully and follow all safety rules and operating instructions.

Write the Serial Number for your unit here:

_____

FELIX STORCH, INC.
Summit Appliance Division
770 Garrison Avenue
Bronx, New York 10474
www.summitappliance.com

IMPORTANT SAFEGUARDS

Your safety and the safety of others are very important.

We have provided many important safety messages in this manual and on your appliance. Always read and obey all safety messages.

This is the Safety Alert Symbol. The symbol alerts you to potential hazards that can kill or injure you and others. All safety messages will follow the Safety Alert Symbol and either the words "DANGER" or "WARNING".

DANGER

Danger means that failure to heed this safety statement may result in severe personal injury or death.

WARNING

Warning means that failure to heed this safety statement may result in extensive product damage, serious personal injury, or death.

All safety messages will alert you about the potential hazard, tell you how to reduce the chance of injury, and let you know what can happen if the instructions are not followed.

Before the appliance is used, it must be properly positioned and installed as described in this manual, so read the manual carefully. To reduce the risk of fire, electrical shock or injury when using the appliance, follow basic precautions, including the following:

DANGER

- Plug into a grounded 3-prong outlet, do not remove grounding prong, do not use an adapter, and do not use an extension cord.
- Replace all panels before operating.
- It is recommended that a separate circuit serving only your appliance be provided. Use receptacles that cannot be turned off by a switch or pull chain.
- Never clean appliance parts with flammable fluids. These fumes can create a fire hazard or explosion. And do not store or use gasoline or other flammable vapors and liquids in the vicinity of this or any other appliance. The fumes can create a fire hazard or explosion.
- Before proceeding with cleaning and maintenance operations, make sure the power line of the unit is disconnected.
- Do not connect or disconnect the electric plug when your hands are wet.
- Unplug the appliance or disconnect power before cleaning or servicing. Failure to do so can result in electrical shock or death.
- Do not attempt to repair or replace any part of your appliance unless it is specifically recommended in this manual. All other servicing should be referred to a qualified technician.
- **SHOCK HAZARD** - Electrical Grounding required.

⚠ WARNING

FREE-STANDING INSTALLATION ONLY!

FOLLOW WARNING CALLOUTS BELOW ONLY WHEN APPLICABLE TO YOUR MODEL.

- Use two or more people to move and install appliance. Failure to do so can result in back or other injury.
- To ensure proper ventilation for your appliance, the front, back, sides and top of the unit must be completely unobstructed. Choose a well-ventilated area with temperatures above 60°F (16°C) and below 90°F (32°C). This unit must be installed in an area protected from the elements, such as wind, rain, water spray or drips.
- The appliance should not be located next to ovens, grills or other sources of high heat.
- The appliance must be installed with all electrical, water and drain connections in accordance with state and local codes. A standard electrical supply (115 V AC only, 60 Hz), properly grounded in accordance with the National Electrical Code and local codes and ordinances, is required.
- Do not kink or pinch the power supply cord of the appliance.
- The size of the fuse (or circuit breaker) should be 15 amperes.
- It is important that the appliance be leveled in order to work properly. You may need to make several adjustments to level it.
- All installations must be in accordance with local plumbing code requirements.
- Make certain that the pipes are not pinched, kinked or damaged during installation.
- Check for leaks after connection.
- Never allow children to operate, play with or crawl inside the appliance.
- Although the unit has been tested at the factory, due to long-term transit and storage, the first batch of cubes must be discarded.
- Do not use solvent-based cleaning agents or abrasives on the interior. These cleaners may damage or discolor the interior.
- Use this appliance only for its intended purpose as described in this *Instruction Manual*.
- Keep fingers out of the “pinch point” areas. Clearances between the doors and between the doors and cabinet are necessarily small. Be careful closing doors when children are in the area.

⚠ DANGER ⚠

Risk of child entrapment!

Child entrapment and suffocation are not problems of the past. Junked or abandoned appliances are still dangerous, even if they will “just sit in the garage a few days”.

Before discarding your old refrigerator:

- *Take off the doors*
- *Leave the shelves in place so that children may not easily climb inside.*

- SAVE THESE INSTRUCTIONS -

Table of Contents

Important Safeguards ..... **2 - 3**
Location of Parts **5**
Technical Data **6**
Installation Instructions **6**
To Install the Door Handle
Reversing the Door Swing
Operating Your Wine Cellar **7**
The Control Panel
The Display Screen
Care and Maintenance **8**
Cleaning Your Wine Cellar
Moving Your Wine Cellar
Important Precautions
Electrical Circuit Diagram **9**
Troubleshooting **10**
Limited Warranty **12**

Location of Parts

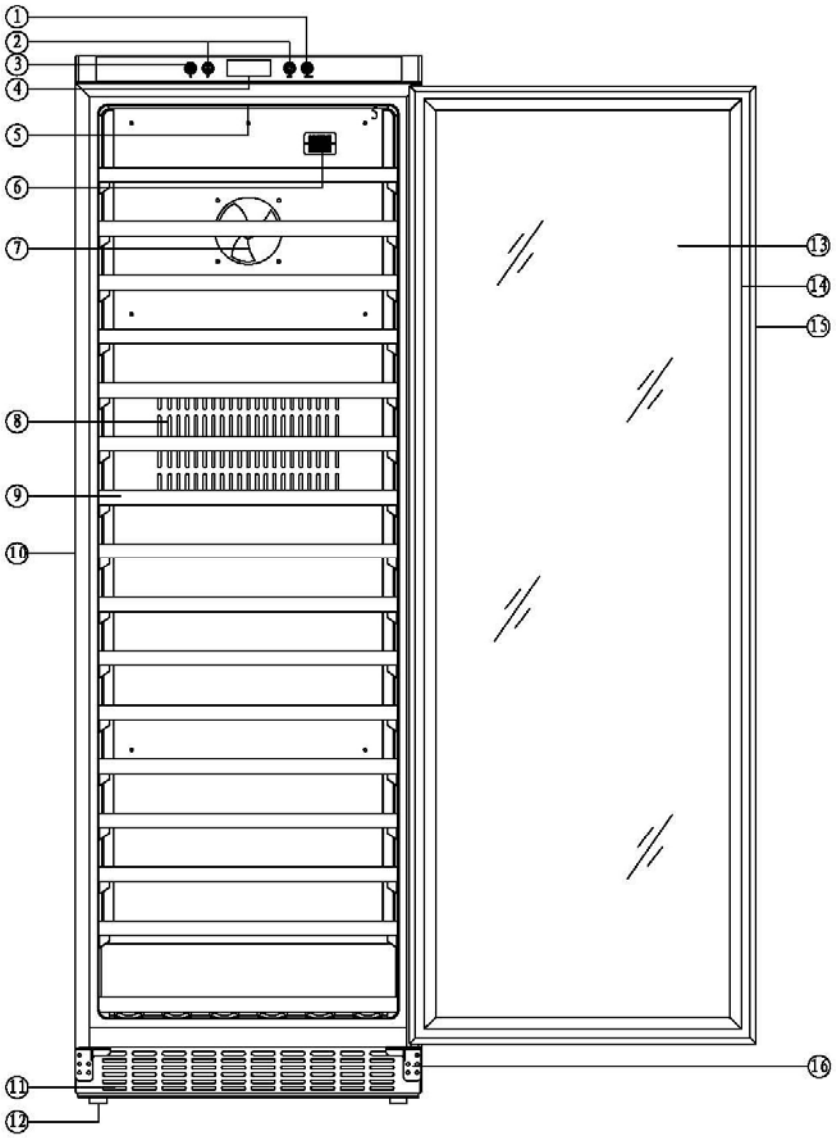

1. Light switch
2. Temperature setting
3. C/F switch
4. Temperature display
5. Light
6. Temperature probe
7. Fan
8. Exhaust window
9. Shelf
10. Body
11. Exhaust window
12. Foot
13. Glass
14. Door seal
15. Handle
16. Lower hinge

Technical Data

Model Number	SWC1925
Type	Glass door wine cellar
Capacity	168 bottles (15.9 ft^3)
Electrical Rating	110V AC, 60 Hz
Rated Current	1.5A
Input Power	230W
Power Consumption	438 kWh/yr
Temperature Control Range	40° to 64°F
Net Weight	221.8 lbs
Gross Weight	251.3 lbs
Unit Size (W×D×H)	23.4" x 26.8" x 70"

Installation Instructions

Your SWC1925 wine cellar must not be recessed or built into an enclosure. It must be installed free-standing, allowing plenty of clearance at the back, sides and top. Be particularly careful to keep the front of the unit clear of obstructions, especially the vents at the bottom.

Before using your wine cellar:

- Remove the exterior and interior packing.
- Never lift the unit by the door handle.
- Never install or operate the unit behind closed cabinet doors.
- Before connecting the appliance to the power source, let it stand upright for approximately 2 hours. This will reduce the possibility of a malfunction in the cooling system from handling during transportation.
- Clean the interior surface with lukewarm water using a soft cloth.
- Place your appliance on a floor that is strong enough to support the appliance when it is fully loaded.
- To level your appliance, adjust the front legs at the bottom of the appliance.

To Install the Door Handle:

For shipment, the door handle has been stored at the back of the unit. To install the handle, the door gasket should be gently pulled back where it covers the screw holes for the handle, then the handle should be attached by screwing it into place with the two screws which are packed in the plastic bag with this *Instruction Manual*.

Reversing the Door Swing:

As you received your wine cellar, the door swings open at the left. If you wish to reverse the swing so that the door opens from the right, **it is most important to have at least one other person to help. It is very dangerous to try to reverse the door swing by yourself**. Now, unscrew the upper door hinge while the second person supports the door. Remove the upper hinge and carefully lift the door off the bottom hinge. Unscrew the bottom hinge and install it on the left side of the unit. Flip the door around so that the handle is on the right side and slip the door over the bottom hinge. Reattach the door by screwing the top hinge into the holes provided on the upper left surface of the unit. Make adjustments as necessary to be sure the door is aligned properly.

Operating Your Wine Cellar

NOTE: Allow unit temperature to stabilize for 24 hours before use.

The Control Panel:

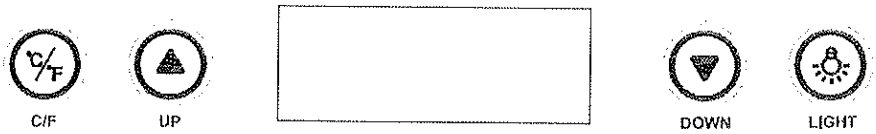

- To control the interior temperature, press the UP and DOWN buttons on either side of the display screen. Each press will adjust the temperature by 1C° between 5° and 18°C, or 1F° between 40° and 64°F.
- To turn the internal LED lighting on or off, press the LIGHT button on the right side.
- To switch the temperature display from Celsius to Fahrenheit or vice versa, press the C/F button on the left side.

The Display Screen:

On the display screen in the middle of the control panel, you can read the following information and adjust the temperature setting according to the ambient conditions:

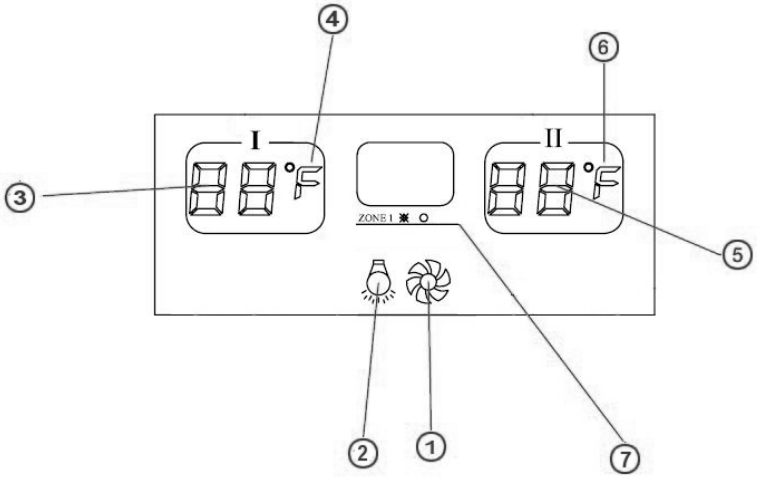

1. Indicator of the unit's working status
2. On or Off status of the interior lighting
3. Your set temperature
4. Celsius or Fahrenheit degrees
5. The actual interior temperature
6. Celsius or Fahrenheit degrees
7. Whether the unit is cooling or maintaining the current temperature
   ※ : Cooling
   ○ : Maintaining the current temperature

Care And Maintenance

Cleaning your wine cellar

- Unplug the wine cellar and remove the bottles.
- Wash the inside with a warm water and baking soda solution. The solution should be about 2 tablespoons of baking soda to a quart of water.
- The outside of the wine cellar should be cleaned with mild detergent in warm water.
- Pull out the water collection tray at the bottom and wash it.

Moving your wine cellar

- Remove all the bottles.
- Securely tape down all loose items (shelves) inside the wine cellar.
- Turn the leveling legs up to the base to avoid damage.
- Tape the door shut.
- Be sure the wine cellar stays in the upright position during transportation.

Important Precautions

- Be sure front grille is free of obstruction. Obstructing free airflow can cause the unit to malfunction and will void the warranty.
- Failure to clean the condenser every six months can cause the unit to malfunction.
- Do not block any internal fans.
- Use only genuine supplier's replacement parts. Unapproved parts can damage the unit, affect its operation or performance and may void the warranty.

Electrical Circuit Diagram

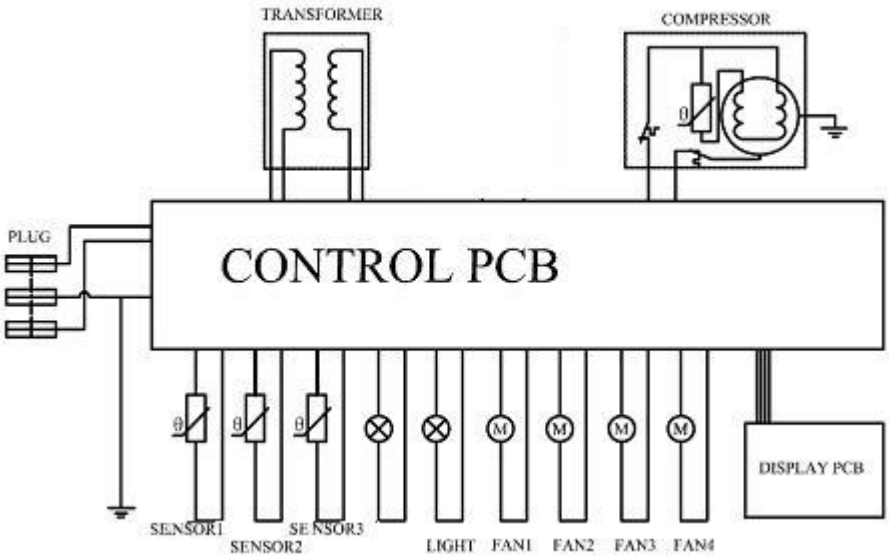

Troubleshooting

You can solve many common wine cellar problems easily, saving you the cost of a possible service call. Try the suggestions below to see if you can solve the problem before calling the service center.

PROBLEM	POSSIBLE CAUSE
Wine cellar does not operate.	Not plugged in. Incorrect voltage supply. Circuit breaker tripped or fuse blown.
The wine cellar does not get cold enough.	Check the temperature control setting. External environment may require a higher setting. The door is opened too often. The door is not closed completely. The door gasket does not seal properly.
The light does not work.	Contact the Service Center.
Vibrations	Check to be sure the wine cellar is level.
The wine cellar seems to make too much noise.	The wine cellar is not level. Check the fan.
The door does not close properly.	The wine cellar is not level. The door gasket is out of position. The shelves are out of position.
LED does not display.	Main control board does not work. PCB problem There is a problem with the plug.
LED display error	Temperature probe is not working properly.
Buttons are not functional.	Temperature controller panel is damaged.

If you still have a problem with your wine cellar, call our SUMMIT Service Center toll-free at **1-800-932-4267**.

Notes

Limited Warranty

ONE-YEAR LIMITED WARRANTY

Within the 48 contiguous United States, for one year from the date of purchase, when this appliance is operated and maintained according to instructions attached to or furnished with the product, warrantor will pay for factory-specified parts and repair labor to correct defects in materials or workmanship. Service must be provided by a designated service company. Outside the 48 states, all parts are warranted for one year from manufacturing defects. Plastic parts, shelves and cabinets are warranted to be manufactured to commercially acceptable standards, and are not covered from damage during handling or breakage.

5-YEAR COMPRESSOR WARRANTY

1. The compressor is covered for 5 years.
2. Replacement does not include labor.

ITEMS WARRANTOR WILL NOT PAY FOR:

1. Service calls to correct the installation of your appliance, to instruct you how to use your appliance, to replace or repair fuses or to correct wiring or plumbing.
2. Service calls to repair or replace appliance light bulbs or broken shelves. Consumable parts (such as filters) are excluded from warranty coverage.
3. Damage resulting from accident, alteration, misuse, abuse, fire, flood, acts of God, improper installation, installation not in accordance with electrical or plumbing codes, or use of products not approved by warrantor.
4. Replacement parts or repair labor costs for units operated outside the United States.
5. Repairs to parts or systems resulting from unauthorized modifications made to the appliance.
6. Expenses for travel and transportation for product service in remote locations.
7. The removal and reinstallation of your appliance if it is installed in an inaccessible location or is not installed in accordance with published installation instructions.

DISCLAIMER OF IMPLIED WARRANTIES; LIMITATION OF REMEDIES

CUSTOMER'S SOLE AND EXCLUSIVE REMEDY UNDER THIS LIMITED WARRANTY SHALL BE PRODUCT REPAIR AS PROVIDED HEREIN. IMPLIED WARRANTIES, INCLUDING WARRANTIES OF MERCHANTABILITY OR FITNESS FOR A PARTICULAR PURPOSE, ARE LIMITED TO ONE YEAR. WARRANTOR SHALL NOT BE LIABLE FOR INCIDENTAL OR CONSEQUENTIAL DAMAGES. SOME STATES DO NOT ALLOW THE EXCLUSION OR LIMITATION OF INCIDENTAL OR CONSEQUENTIAL DAMAGES, OR LIMITATIONS ON THE DURATION OF IMPLIED WARRANTIES OF MERCHANTABILITY OR FITNESS, SO THESE EXCLUSIONS OR LIMITATIONS MAY NOT APPLY TO YOU. THIS WARRANTY GIVES YOU SPECIFIC LEGAL RIGHTS AND YOU MAY ALSO HAVE OTHER RIGHTS, WHICH VARY FROM STATE TO STATE.

WARNING! This product may contain chemicals known to the state of California to cause cancer or birth defects or other reproductive harm. For more information, visit: www.summitappliance.com/prop65

Chemicals known by the manufacturer to be present in this product in concentrations higher than threshold limits: NONE.

FELIX STORCH, INC.
770 Garrison Avenue
Bronx, NY 10474
Phone: (718) 893-3900
Fax: (718) 842-3093
www.summitappliance.com

SUMMIT PROFESSIONAL

For parts and accessory ordering, troubleshooting and helpful hints, visit:
www.summitappliance.com/support

Printed in China