FF1525PLIM

73" x 26" x 26.25" (H x W x D)

Counter depth 14 cu.ft. frost-free refrigerator-freezer with icemaker in platinum, part of the Ingenious Series designed for true user convenience

Highlights:

Part of the Ingenious Series of refrigerator-freezers, designed with extra care for modern user convenience

Over 14 cu.ft. of storage in a unique counter depth fit

Modern platinum finish offers an attractive look for any kitchen

Product Features:

Frost-free operation	Ensures low maintenance operation by eliminating the manual defrosting process
Platinum finish	Stylish look suits many kitchen styles
Adjustable safety glass shelves	Rearrange refrigerator and freezer space to accommodate all sizes or remove shelves for simple cleanup
Door storage	Full and half shelves in both compartments, with a large refrigerator door shelf that can accommodate gallon-sized containers
Factory installed icemaker	Keep a steady supply of ice on hand in the freezer compartment
Smart Station	Unique door compartment lets you store selected items in a way that's easily accessible without opening the door
Humidity controlled crisper	Large crisper drawer offers the ideal conditions for storing produce
Deli crisper	Clear drawer compartment is ideally designed for deli storage
Sliding mini-crisper	Great for smaller items, the compact crisper can be moved from side to side for added flexibility

SUMMIT APPLIANCE DIVISION, FELIX STORCH, INC. | ISO 9001:2015 Certified
770 Garrison Avenue Bronx, NY 10474 USA **TEL** 718-893-3900 **FAX** 844-478-8799 info@summitappliance.com **www.summitappliance.com**

SUMMIT

FF1525PLIM Specifications:

Overview	
Height of Cabinet	73.0" (185 cm)
Width	26.0" (66 cm)
Width with Door Open	28.5" (72 cm)
Depth	26.25" (67 cm)
Depth with door at 90°	50.63" (129 cm)
Capacity	14.12 cu.ft. (400 L)
Defrost Type	Frost-Free
Door	Platinum
Cabinet	Platinum
US Electrical Safety	UL
Canadian Electrical Safety	ULC
Energy Usage/Year	427.0kWh/year
Amps	1.2
Voltage/Frequency	115 V AC/60 Hz
Weight	200.0 lbs. (91 kg)
Parts & Labor Warranty	1 Year
Compressor Warranty	5 Years
UPC	761101031590
Refrigerator-Freezer	
Door Swing	RHD
Reversible	No
Adjustable Shelves	Yes
Crisper Qty	2
Crisper Finish	Transparent
Crisper Cover	Glass
Interior Light	Yes
Refrigerator - Shelf Type	Glass
Refrigerator - Shelf Qty	2
Refrigerator - Full Door Shelves	2
Refrigerator - Half Door Shelves	2
Freezer - Shelf Type	Glass
Freezer - Shelf Qty	1
Freezer - Full Door Shelves	1
Freezer - Half Door Shelves	1
Gallon Door Storage	Yes
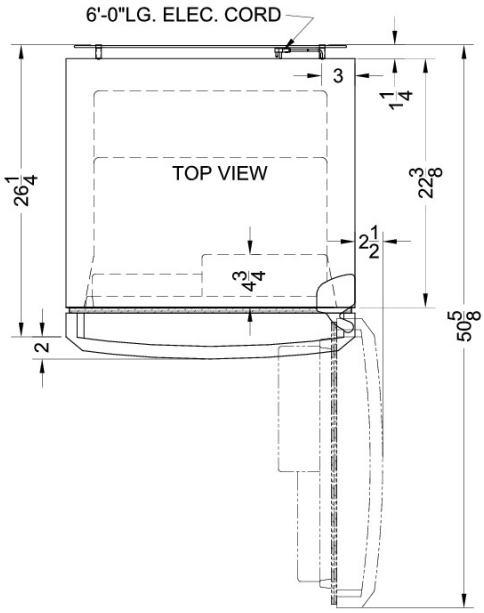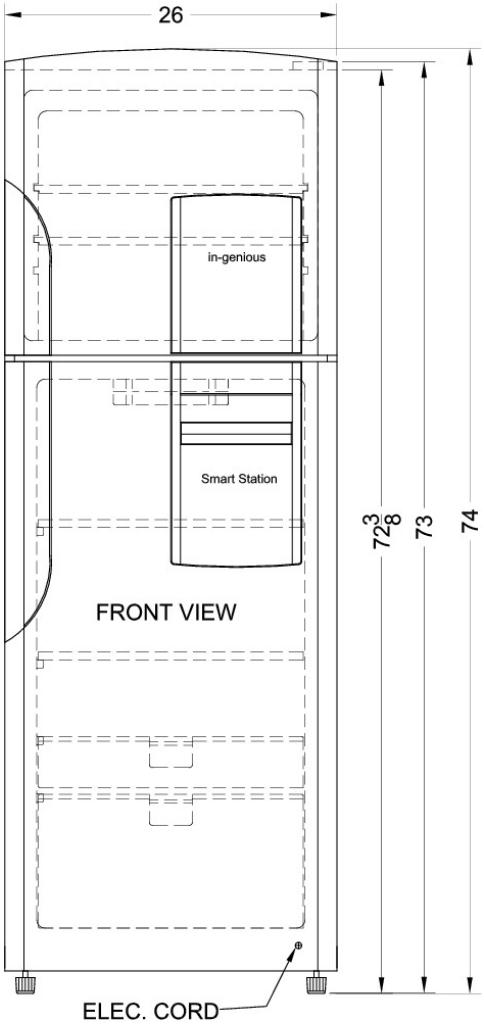
Thermostat Type	Digital
Fan Type	Interior
Refrigerant Type	R134a
Refrigerant Amount	3.88 oz.
High Side PSI	335.0
Low Side PSI	140.0
Level Legs	2
Wheels	2