SUMMIT

FF1410W

69.5" x 26" x 26" (H x W x D)

DISCONTINUED: Replaced by the FF1414W

Highlights:

Unique 26 inch footprint fits easily in tight kitchens

Deluxe interior is fully featured for storage convenience

True frost-free operation saves on maintenance by preventing icy buildup

Product Features:

Frost-free operation	No-frost convenience for reduced user maintenance
26" footprint	Perfectly sized for tight spaces
Large capacity	Over 12 cubic feet of storage inside
Interior light	Automatically illuminates when you open the door
Adjustable glass shelves	Rearrange your refrigerator space to accommodate all shapes and sizes or remove shelves for a simple clean-up
Fruit and vegetable crisper	Get the longest life and best taste out of produce by storing it in a convenient slide drawer
Door storage	Store large bottles right on the door for easy access
Adjustable thermostat	Control your food's temperature with ease and accuracy
Full freezer shelf	Allows you to better separate those TV dinners from your ice cream

SUMMIT

FF1410W Specifications:

Overview	
Height of Cabinet	69.5" (177 cm)
Width	26.0" (66 cm)
Depth	26.0" (66 cm)
Depth with door at 90°	51.0" (130 cm)
Capacity	12.5 cu.ft. (354 L)
Defrost Type	Frost-Free
Door	White
Cabinet	White
US Electrical Safety	UL
Canadian Electrical Safety	ULC
Energy Usage/Year	419.0kWh/year
Voltage/Frequency	115 V AC/60 Hz
Parts & Labor Warranty	1 Year
Compressor Warranty	5 Years
UPC	761101001302
Refrigerator-Freezer	
Door Swing	RHD
Reversible	Yes
Adjustable Shelves	Yes
Crisper Qty	1
Crisper Finish	Transparent
Crisper Cover	Glass
Interior Light	Yes
Refrigerator - Interior Height	40.0" (102 cm)
Refrigerator - Interior Width	21.25" (54 cm)
Refrigerator - Interior Depth	19.5" (50 cm)
Refrigerator - Shelf Type	Glass
Refrigerator - Shelf Qty	2
Refrigerator - Full Door Shelves	6
Freezer - Interior Height	16.0" (41 cm)
Freezer - Interior Width	20.5" (52 cm)
Freezer - Interior Depth	15.25" (39 cm)
Thermostat Type	Dial
Refrigerant Type	R134a
Level Legs	2
Compressor Step Height	8.0" (20 cm)
Compressor Step Width	21.0"
Compressor Step Depth	6.0"

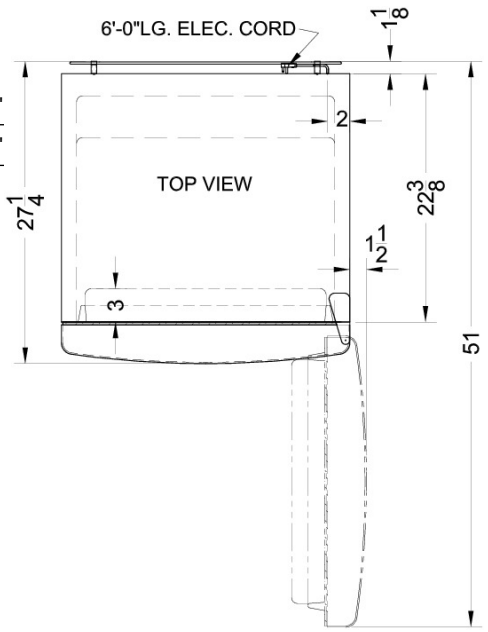

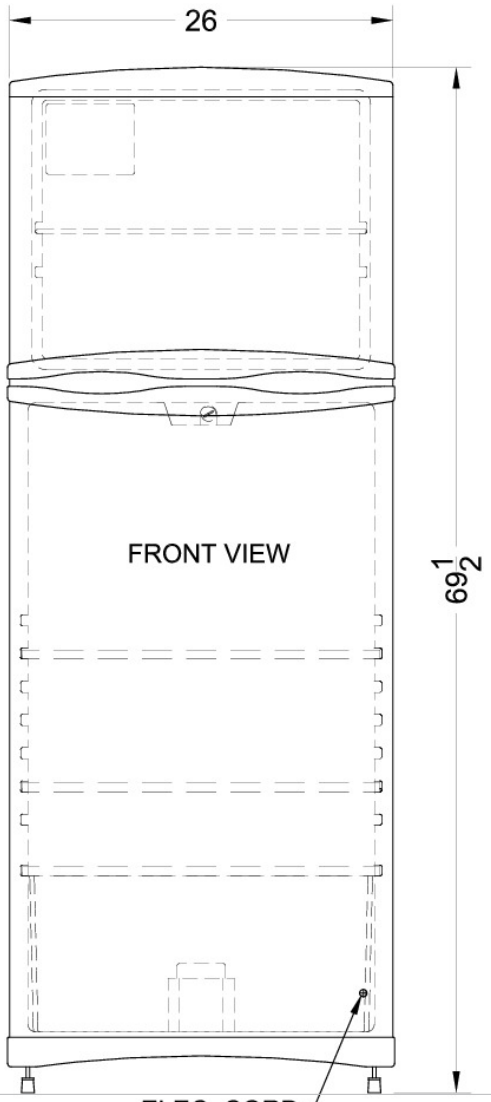

SUMMIT APPLIANCE DIVISION, FELIX STORCH, INC. | ISO 9001:2015 Certified
770 Garrison Avenue Bronx, NY 10474 USA **TEL** 718-893-3900 **FAX** 844-478-8799 info@summitappliance.com **www.summitappliance.com**