CR2B120

2.5" x 11.25" x 20" (H x W x D)

115V 2-burner radiant cooktop with smooth black ceramic glass surface and preinstalled cord

Highlights:

Two-burner electric cooktop with 120V operation

Smooth black ceramic glass surface offers easy cleanup and modern style

Stainless steel trim offers an added touch of modern style

Product Features:

Smooth black ceramic surface	Easy cleanup and elegant style on a smooth ceramic glass surface
Two heating elements	One 900W burner and one 500W burner in smooth ceramic glass
115V operation	Standard 3-plug cord included for use with 20 amp circuits
Push-to-turn controls	Prevents accidents by requiring a small amount of force to turn on cooktop heat
Indicator lights	Show when and which burners are turned on
Designed for built-in installation	Cutout dimensions: 10 1/8" W x 18 5/8" D
ADA compliant design	Upfront controls and easy-to-operate knobs offer easier accessibility
Cord included	Ships with standard 3-pronged cord pre-installed

SUMMIT APPLIANCE DIVISION, FELIX STORCH, INC. | ISO 9001:2015 Certified
770 Garrison Avenue Bronx, NY 10474 USA **TEL** 718-893-3900 **FAX** 844-478-8799 info@summitappliance.com **www.summitappliance.com**

SUMMIT

CR2B120 Specifications:

Overview	
Height of Cabinet	2.5" (6 cm)
Width	11.25" (29 cm)
Depth	20.0" (51 cm)
Cabinet	Black
US Electrical Safety	ETL
Canadian Electrical Safety	ETL-C
Amps	20.0
Voltage/Frequency	115 V AC/60 Hz
Weight	20.0 lbs. (9 kg)
Shipping Weight	13.5 lbs. (6 kg)
Parts & Labor Warranty	1 Year
UPC	761101023946
Electric Cooktop	
Heating Type	Radiant
Surface	Glass
Element Type	Glasstop
Number of Elements	2
Controls	Dial
Countertop Cutout Height	2.5" (6 cm)
Countertop Cutout Width	10.13" (26 cm)
Countertop Cutout Depth	18.63" (47 cm)
Element #1 Size	5.75" (15 cm)
Element #1 Wattage	500.0
Element #2 Size	7.0" (18 cm)
Element #2 Wattage	900.0

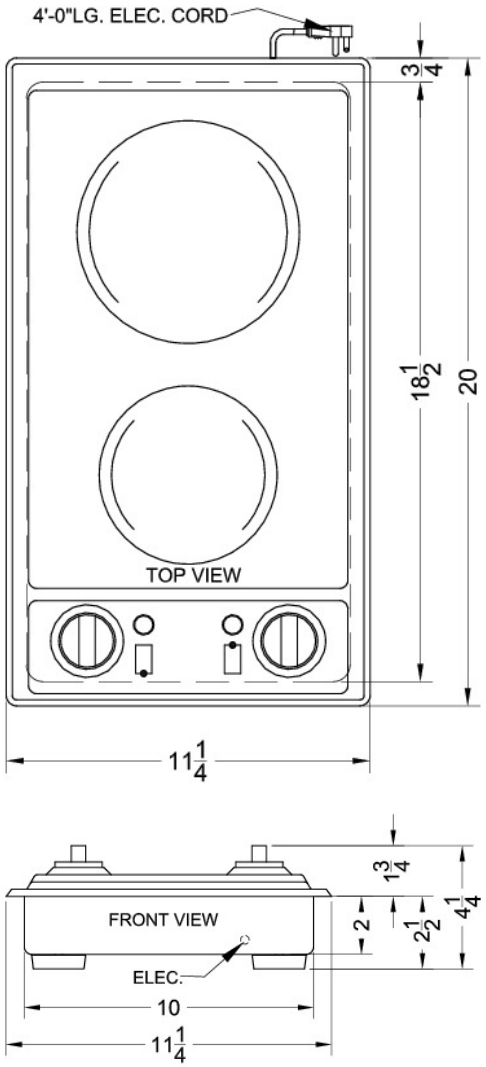

SUMMIT APPLIANCE DIVISION, FELIX STORCH, INC. | ISO 9001:2015 Certified
770 Garrison Avenue Bronx, NY 10474 USA **TEL** 718-893-3900 **FAX** 844-478-8799 info@summitappliance.com **www.summitappliance.com**