SUMMIT

FF946WIM

65.75" x 22" x 26" (H x W x D)

8.8 cu.ft. frost-free refrigerator-freezer in white, with factory installed icemaker

Highlights:

Unique 22" width is ideal for apartment and space-challenged kitchens while still offering nearly 9 cu.ft. of storage

True frost-free operation saves you maintenance by preventing icy buildup

Fully featured interior with a crisper, adjustable shelves, and more

Product Features:

Top Mount Refrigerator-Freezer	Made in North America with a full storage capacity and frost-free design for convenient storage
Thin-line design	Limited space is no problem for our thin-line models, designed specifically for those hard-to-fit spots
Frost-free operation	No-frost convenience for reduced user maintenance
Adjustable glass shelves	Spill-proof shelves made from solid safety glass offer convenient and flexible storage in the refrigerator section
Factory installed icemaker	Produces a steady of supply of ice in the freezer section
Door storage	Refrigerator door includes four racks ideal for storing condiments and tall bottles. Freezer door includes one full and one half shelf
Clear crisper	Get the longest life and best taste out of produce by storing greens in a convenient slide drawer that tilts out for easy loading and unloading
Reversible doors	User-reversible door swing for added flexibility
Interior light	Automatically illuminates when you open the refrigerator door

SUMMIT APPLIANCE DIVISION, FELIX STORCH, INC. | ISO 9001:2015 Certified
770 Garrison Avenue Bronx, NY 10474 USA **TEL** 718-893-3900 **FAX** 844-478-8799 info@summitappliance.com **www.summitappliance.com**

SUMMIT

FF946WIM Specifications:

Overview	
Height of Cabinet	64.75" (164 cm)
Height to Hinge Cap	65.75" (167 cm)
Width	22.0" (56 cm)
Width with Door Open	23.75" (60 cm)
Depth	26.0" (66 cm)
Depth with door at 90°	44.25" (112 cm)
Capacity	8.8 cu.ft. (249 L)
Defrost Type	Frost-Free
Door	White
Cabinet	White
US Electrical Safety	UL
Canadian Electrical Safety	ULC
Energy Usage/Year	400.0kWh/year
Amps	0.82
Voltage/Frequency	115 V AC/60 Hz
Weight	125.0 lbs. (57 kg)
Parts & Labor Warranty	1 Year
Compressor Warranty	5 Years
UPC	761101050898
Refrigerator-Freezer	
Door Swing	RHD
Reversible	Yes
Adjustable Shelves	Yes
Crisper Qty	1
Crisper Finish	Transparent
Crisper Cover	Glass
Interior Light	Yes
Refrigerator - Interior Height	40.5" (103 cm)
Refrigerator - Interior Width	17.0" (43 cm)
Refrigerator - Interior Depth	17.0" (43 cm)
Refrigerator - Capacity	6.67 cu.ft
Refrigerator - Shelf Type	Glass
Refrigerator - Shelf Qty	2
Refrigerator - Full Door Shelves	4
Freezer - Interior Height	16.0" (41 cm)
Freezer - Interior Width	16.25" (41 cm)
Freezer - Interior Depth	13.25" (34 cm)
Freezer - Capacity	2.1 cu.ft
Freezer - Shelf Type	Wire
Freezer - Shelf Qty	1
Freezer - Full Door Shelves	1
Freezer - Half Door Shelves	1
Thermostat Type	Dial
Fan Type	Interior
Refrigerant Type	R134a
Refrigerant Amount	3.53 oz.
Level Legs	2
Compressor Step Height	9.75" (25 cm)
Compressor Step Width	17.0" (43 cm)
Compressor Step Depth	4.0" (10 cm)

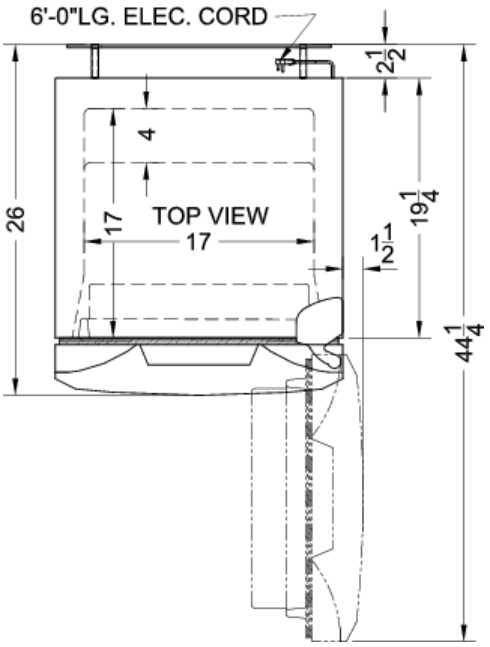

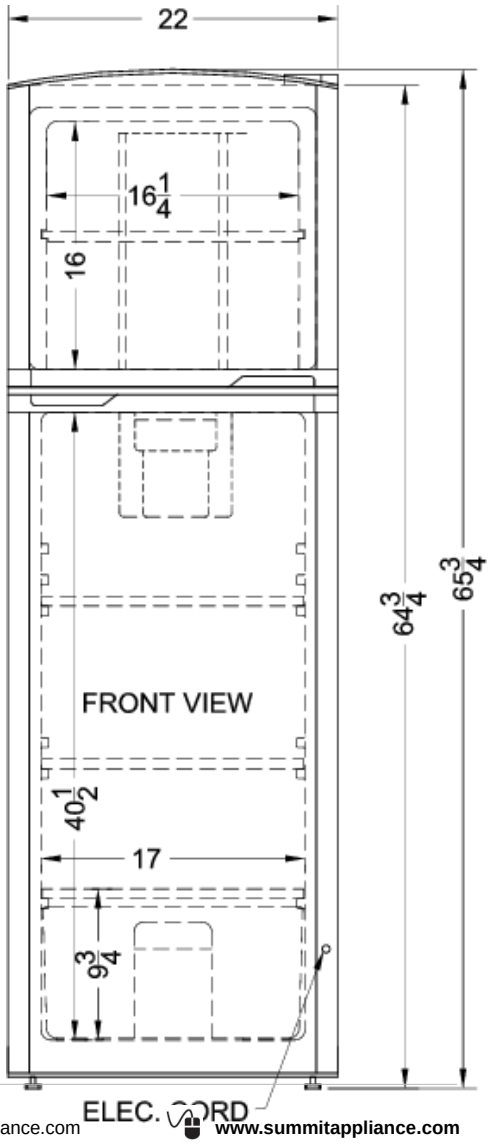

SUMMIT APPLIANCE DIVISION, FELIX STORCH, INC. | ISO 9001:2015 Certified
770 Garrison Avenue Bronx, NY 10474 USA **TEL** 718-893-3900 **FAX** 844-478-8799 info@summitappliance.com **www.summitappliance.com**