SWC532LBIST

34" x 23.63" x 23.63" (H x W x D)

Dual zone 44-bottle built-in commercial wine cellar designed for the display and refrigeration of beverages, with seamless SS trimmed glass door, full extension shelves, digital thermostat, and black cabinet

Highlights:

Chill white and sparkling wine while preserving red in two distinct temperature zones

Flexible design allows built-in or freestanding use in any 24" space

Full extension slide-out shelves feature an attractive stainless steel trim

Product Features:

Commercial design	Meets UL-471 commercial standards
Built-in capable	Make the best use of space by installing your appliance under the counter
Two temperature zones	Lower zone for reds has a temperature range of 54 to 72º F; Upper zone stores whites and sparkling wine between 41 to 54º F
Digital thermostat	Set and adjust two temperature zones separately with easy-to-use digital controls and digital displays that can show the temperature in Celsius or Fahrenheit
44 Bottle capacity	Interior holds up to 44 standard Bordeaux style bottles. Lower red wine section can store up to 16 larger Burgundy/Pinot Noir style bottles as well
Seamless stainless steel trimmed door frame	Single-piece door trim offers a more deluxe look
Full extension slide-out shelves	Shelves securely glide all the way out for easier loading and unloading
Automatic defrost	Reduced maintenance with auto defrost system
Stainless steel trimmed wooden shelves	Classic style with an added touch of elegance

SUMMIT APPLIANCE DIVISION, FELIX STORCH, INC. | ISO 9001:2015 Certified
770 Garrison Avenue Bronx, NY 10474 USA **TEL** 718-893-3900 **FAX** 844-478-8799 info@summitappliance.com **www.summitappliance.com**

SUMMIT

SWC532LBIST Specifications:

Overview	
Height of Cabinet	33.5" (85 cm)
Height to Hinge Cap	34.0" (86 cm)
Width	23.63" (60 cm)
Depth	23.63" (60 cm)
Depth with Handle	25.25" (64 cm)
Depth with door at 90°	46.0" (117 cm)
Capacity	5.43 cu.ft. (154 L)
Bottles	44 bottles
Defrost Type	Automatic
Door	Glass
Cabinet	Black
US Electrical Safety	ETL
Canadian Electrical Safety	ETL-C
Amps	1.1
Voltage/Frequency	115 V AC/60 Hz
Weight	112.0 lbs. (51 kg)
Parts & Labor Warranty	1 Year
Compressor Warranty	5 Years
UPC	761101048093
Wine Cellar	
Number of Zones	2
Door Swing	RHD
Reversible	Yes
Shelf Type	Wood
Shelf Qty	6
Thermostat Type	Digital
Interior Light	Yes
Refrigerant Type	R600a
Refrigerant Amount	1.23 oz.
High Side PSI	270.0
Low Side PSI	103.0
Interior Height 1	13.0" (33 cm)
Interior Width 1	20.5" (52 cm)
Interior Depth 1	18.63" (47 cm)
Compressor Step Height	5.0" (13 cm)
Compressor Step Width	20.5" (52 cm)
Compressor Step Depth	6.5" (17 cm)

Temperature Range	41º to 72ºF
Interior Height 2	13.25" (34 cm)
Interior Width 2	20.5" (52 cm)
Interior Depth 2	18.63" (47 cm)

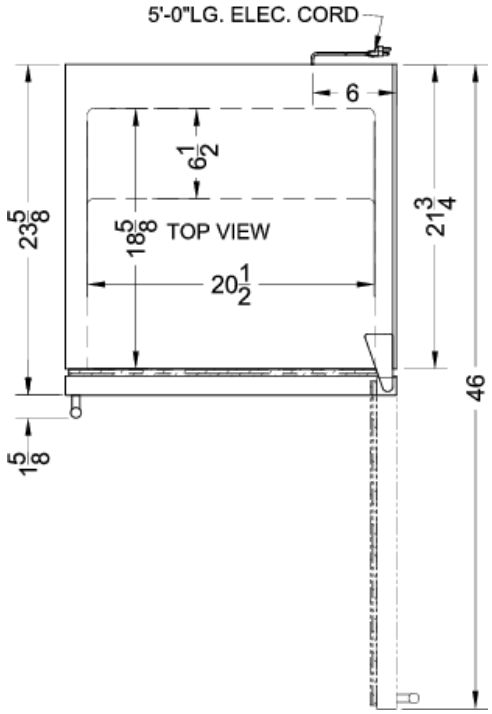

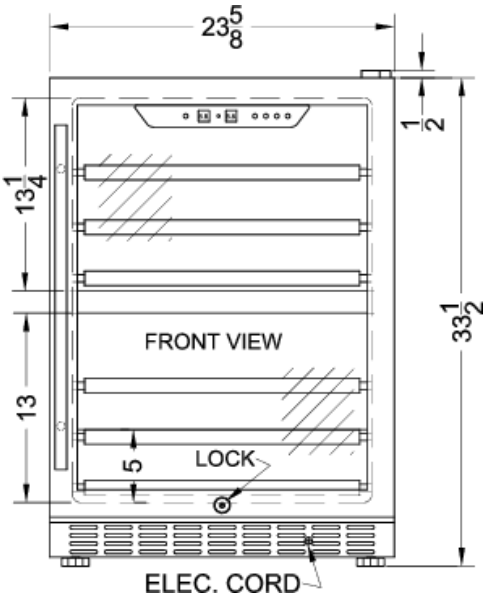

SUMMIT APPLIANCE DIVISION, FELIX STORCH, INC. | ISO 9001:2015 Certified
770 Garrison Avenue Bronx, NY 10474 USA **TEL** 718-893-3900 **FAX** 844-478-8799 info@summitappliance.com **www.summitappliance.com**