WNM6107F

40" x 24" x 24" (H x W x D)

White gas range in slim 24" width with electronic ignition and sealed burners

Highlights:

Slim 24 inch width fits easily in small kitchens

Gas spark ignition adds convenience and safety

Porcelain construction on range top and oven for true durability

Product Features:

Slim 24 inch width	Apartment sized to fit in small or galley kitchens
Gas range	Natural gas range; can be converted to LP Gas in our shop or ordered with KIT LP for conversion
Electronic ignition	Gas spark ignition for automatic lighting of burners
Four sealed burners	Easy cleanup on boil-overs and accidental spills
Porcelain construction	White porcelain removable oven top and door
Broiler drawer	Lower compartment for separate broiling with even heat distribution
Broiler pan included	Two-piece porcelain broiler tray with grease well
Recessed oven door	Smart design limits the depth and protects adjacent cabinets

SUMMIT APPLIANCE DIVISION, FELIX STORCH, INC. | ISO 9001:2015 Certified
770 Garrison Avenue Bronx, NY 10474 USA **TEL** 718-893-3900 **FAX** 844-478-8799 info@summitappliance.com **www.summitappliance.com**

SUMMIT

WNM6107F Specifications:
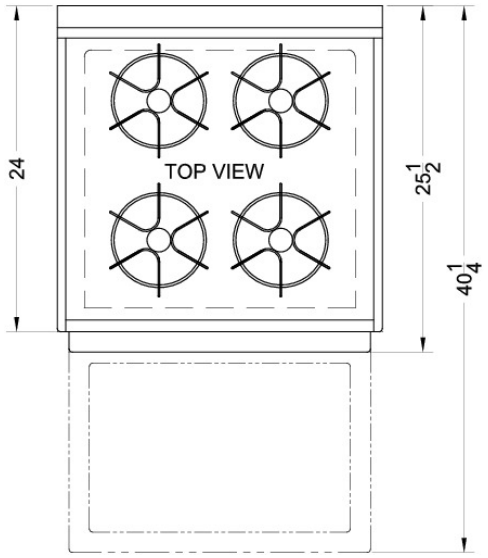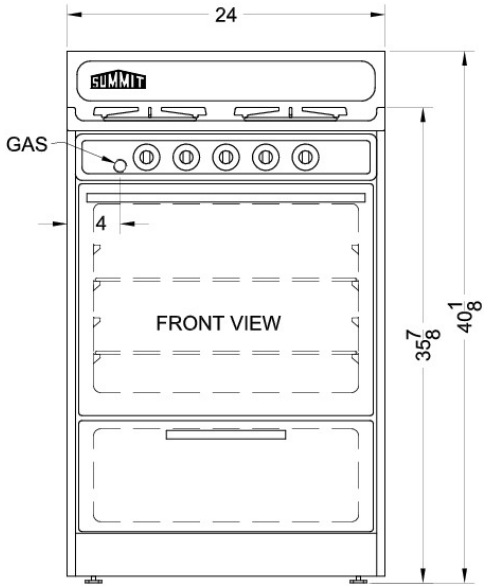
Overview	
Height of Cabinet	40.0" (102 cm)
Width	24.0" (61 cm)
Depth	24.0" (61 cm)
Door	White
Cabinet	White
Weight	150.0 lbs. (68 kg)
Parts & Labor Warranty	1 Year
UPC	761101012414
Gas Range	
Ignition	Spark
LP Convertible	With Kit LP Accessory
Oven Capacity	2.92 cu.ft
Cooktop Surface	Porcelain
Burner Type	Sealed
Number of Burners	4
Burner #1 BTU	9000.0
Burner #2 BTU	9000.0
Burner #3 BTU	9000.0
Burner #4 BTU	9000.0
Burner Controls	Dial
Oven Controls	Dial
Backguard	Yes
Oven Interior Height	14.0" (36 cm)
Oven Interior Width	19.0" (48 cm)
Oven Interior Depth	19.0" (48 cm)
Broiler Location	Below Oven
Broiler Door	White
Oven Door	White