# UF17FF

62.63" x 31.25" x 31.25" (H x W x D)

DISCONTINUED: For a similar product in a slightly larger size, see the UF21FF

## Highlights:

True frost-free operation saves on maintenance by preventing icy buildup

Factory installed lock provides security you can count on

Large capacity with nearly 17 cu.ft. of interior space

## Product Features:

| | |
|---|---|
| Large capacity | 16.8 cu.ft. of interior space |
| Frost-free operation | True no-frost operation that eliminates the need to ever manually defrost the interior |
| Factory installed lock | Keep contents secure with a front lock on the door |
| Reversible door | Keep your options flexible with a reversible door that is easy to switch when your arrangement changes |
| Adjustable shelves | Rearrange the freezer space to fit any sized item or remove shelves for simple cleanup |
| Door shelves | Five racks for convenient storage on the door |
| Storage basket | Lower wire drawer for additional organizing of stored contents |
| Interior light | Automatically illuminates when the door is opened |
| Adjustable thermostat | Manage the temperature with ease and accuracy |

SUMMIT

## UF17FF Specifications:

| Overview | |
|---|---|
| Height of Cabinet | 62.63" (159 cm) |
| Width | 31.25" (79 cm) |
| Depth | 31.25" (79 cm) |
| Depth with Handle | 33.13" (84 cm) |
| Depth with door at 90° | 60.25" (153 cm) |
| Capacity | 16.8 cu.ft. (476 L) |
| Defrost Type | Frost-Free |
| Door | White |
| Cabinet | White |
| US Electrical Safety | UL |
| Canadian Electrical Safety | ULC |
| Energy Usage/Year | 687.0kWh/year |
| Amps | 1.1 |
| Voltage/Frequency | 115 V AC/60 Hz |
| Parts & Labor Warranty | 1 Year |
| Compressor Warranty | 5 Years |
| UPC | 761101022611 |
| **Freezer** | |
| Door Swing | RHD |
| Reversible | Yes |
| Crisper Qty | 1 |
| Interior Height | 53.0" (135 cm) |
| Interior Width | 26.0" (66 cm) |
| Interior Depth | 24.0" (61 cm) |
| Shelf Type | Wire |
| Shelf Qty | 3 |
| Full Door Shelves | 5 |
| Thermostat Type | Dial |
| Interior Light | Yes |
| Refrigerant Type | R134a |
| Refrigerant Amount | 5.0 oz. |
| High Side PSI | 323.0 |
| Low Side PSI | 103.0 |
| Wheels | 4 |

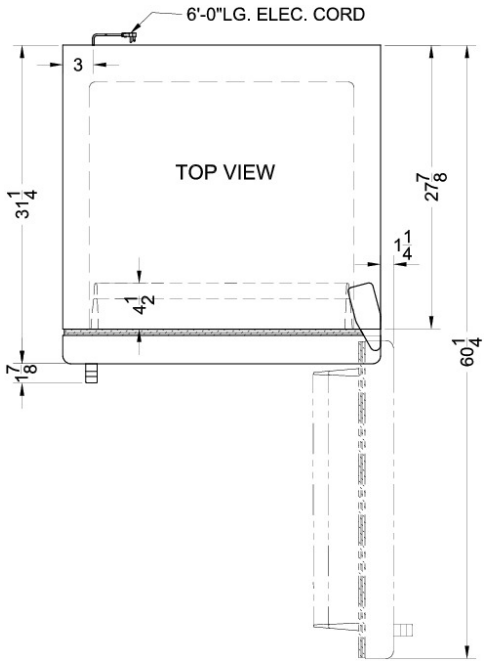


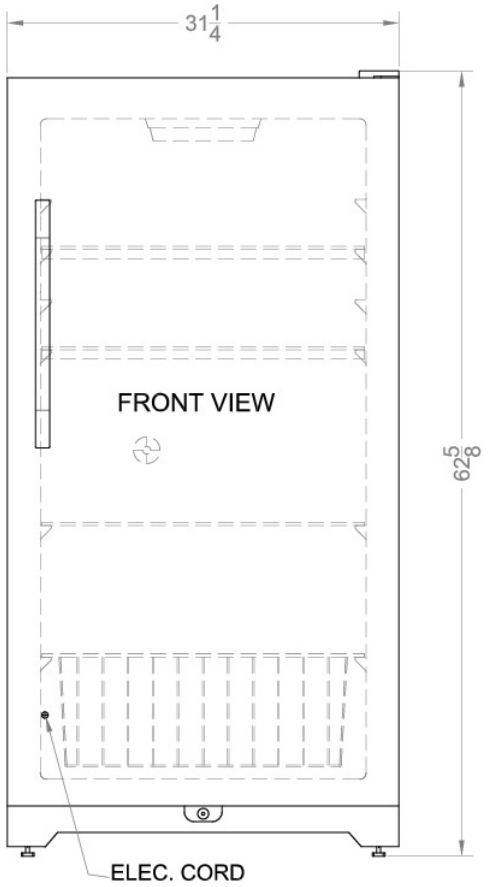


**SUMMIT APPLIANCE DIVISION**, FELIX STORCH, INC. | ISO 9001:2015 Certified
770 Garrison Avenue Bronx, NY 10474 USA **TEL** 718-893-3900 **FAX** 844-478-8799 info@summitappliance.com **www.summitappliance.com**