H1636SS

5" x 36" x 18" (H x W x D)

36 inch wide convertible range hood for ducted or ductless use in stainless steel finish

Highlights:

36" wide hood to match 36" ranges

Convertible from top or rear venting into non-vented recirculating mode

Stainless steel finish for lasting durability

Product Features:

36 inch width	Designed to match 36 inch ranges; also available in 20, 24, and 30 inch widths
Convertible range hood	Use top or rear venting or convert into non-vented recirculating mode
Stainless steel finish	White, black, and bisque hoods also available in same size
Two-speed fan	Variable speed for more venitlation options
Light	Switchable light offers more convenience in your kitchen
Aluminum-charcoal filter	Provides thorough filtering to reduce odors
Made in the USA	Solidly constructed for years of use
More sizes available	Additional sizes can be specially ordered (minimums apply)

SUMMIT APPLIANCE DIVISION, FELIX STORCH, INC. | ISO 9001:2015 Certified
770 Garrison Avenue Bronx, NY 10474 USA **TEL** 718-893-3900 **FAX** 844-478-8799 info@summitappliance.com **www.summitappliance.com**

SUMMIT

H1636SS Specifications:

Overview	
Height of Cabinet	5.0" (13 cm)
Width	36.0" (91 cm)
Depth	18.0" (46 cm)
Cabinet	Stainless Steel
Voltage/Frequency	115 V AC/60 Hz
Weight	15.0 lbs. (7 kg)
Shipping Weight	17.0 lbs. (8 kg)
Parts & Labor Warranty	1 Year
UPC	761101007939

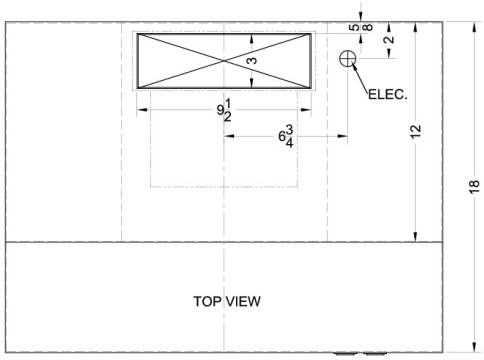

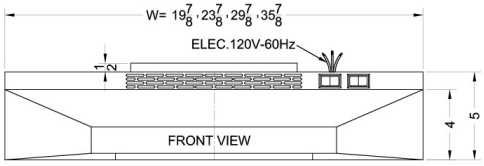

MODEL NO.	WIDTH
1600EZVx20	19 7/8"
1600EZVx24	23 7/8"
1600EZVx30	29 7/8"
1600EZVx36	35 7/8"