accucold

FS407LPLUS

34" x 19.25" x 21.38" (H x W x D)

20" wide all-freezer for freestanding use, manual defrost with a lock and thermometer

Highlights:

Factory installed lock provides security you can count on

Slim 20" width is ideal for any setting

-20°C capable with interior slide-out drawers for easy storage

Product Features:

Slim 20" width	Full 2.8 cu.ft. capacity inside conveniently slim footprint
Fully finished white cabinet	Allows the unit to be used freestanding
Factory installed lock	Top-mounted for convenient security
Thermometer	Thermometer provides external readout of current and high/low temperatures
Hospital grade cord with 'green dot' plug	Secure three-pronged cord for added unit safety
Pull-out drawers	Four clear baskets for convenient and separated storage
-20° capable	Low temperature capability ideal for certain sensitive items
Manual defrost	Efficient performance with reliable temperature stability
Adjustable thermostat	Rear mounted to prevent accidental adjustments

accucold

FS407LPLUS Specifications:
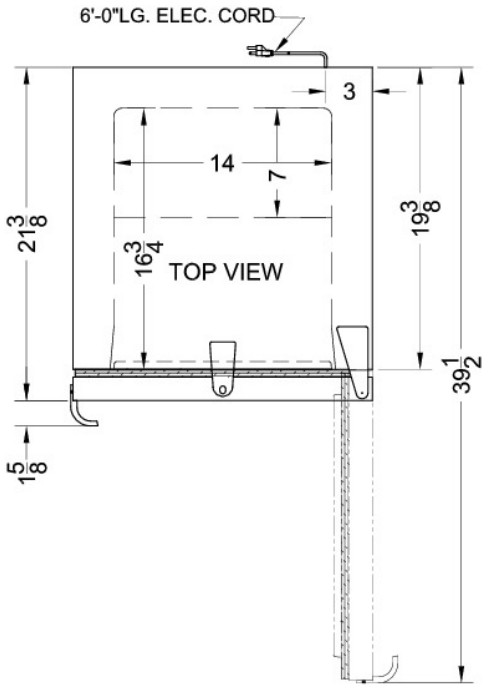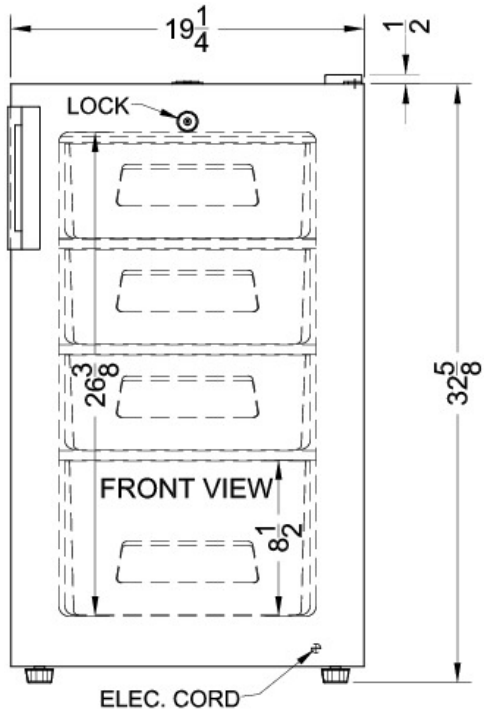
Overview	
Height of Cabinet	33.5" (85 cm)
Height to Hinge Cap	34.0" (86 cm)
Width	19.25" (49 cm)
Depth	21.38" (54 cm)
Depth with Handle	23.0" (58 cm)
Depth with door at 90°	39.5" (100 cm)
Capacity	2.8 cu.ft. (79 L)
Defrost Type	Manual
Door	White
Cabinet	White
US Electrical Safety	ETL
Canadian Electrical Safety	ETL-C
Amps	1.6
Voltage/Frequency	115 V AC/60 Hz
Weight	64.0 lbs. (29 kg)
Shipping Weight	85.0 lbs. (39 kg)
Parts & Labor Warranty	1 Year
Compressor Warranty	5 Years
UPC	761101034034
Freezer	
Door Swing	RHD
Reversible	Factory Reversible
Interior Height	26.38" (67 cm)
Interior Width	14.0" (36 cm)
Interior Depth	16.75" (43 cm)
Thermostat Type	Dial
Refrigerant Type	R134a
Refrigerant Amount	3.0 oz.
High Side PSI	210.0
Low Side PSI	105.0
Level Legs	2
Interior Drawers	Yes
Drawers Qty	4