accucold

FS407LBI7PLUSADA

32.5" x 19.25" x 21.38" (H x W x D)

ADA compliant 20" wide commercial all-freezer for built-in use, manual defrost with a lock and thermometer

Highlights:

32" height fits under lower ADA compliant counters

Flexible design allows built-in or freestanding use in 20" wide spaces

Commercially listed to NSF-7 standards

Product Features:

ADA compliant	32" high to fit under lower ADA compliant counters
Slim 20" width	Full 2.8 cu.ft. capacity inside conveniently slim footprint
Commercially listed	ETL-S listed to NSF standards for commercial use
Built-in capable	Make the best use of space by installing your appliance under the counter
Fully finished white cabinet	Allows the unit to be used freestanding
Factory installed lock	Top-mounted for convenient security
Thermometer	Thermometer provides external readout of current and high/low temperatures
Hospital grade cord with 'green dot' plug	Secure three-pronged cord for added unit safety
Pull-out drawers	Four clear baskets for convenient and separated storage

accucold

FS407LBI7PLUSADA Specifications:
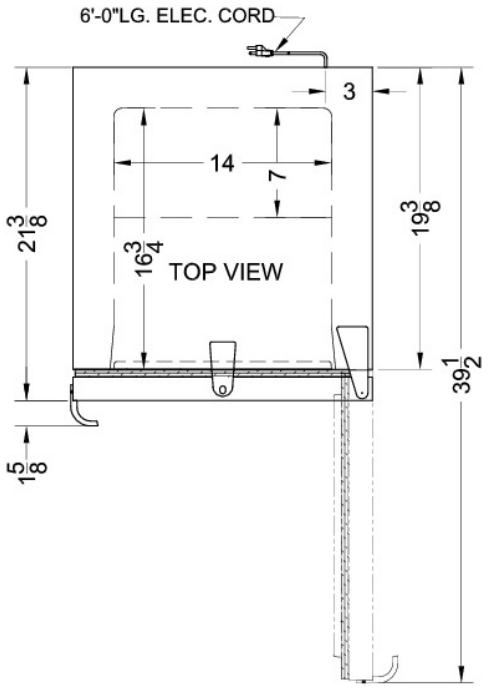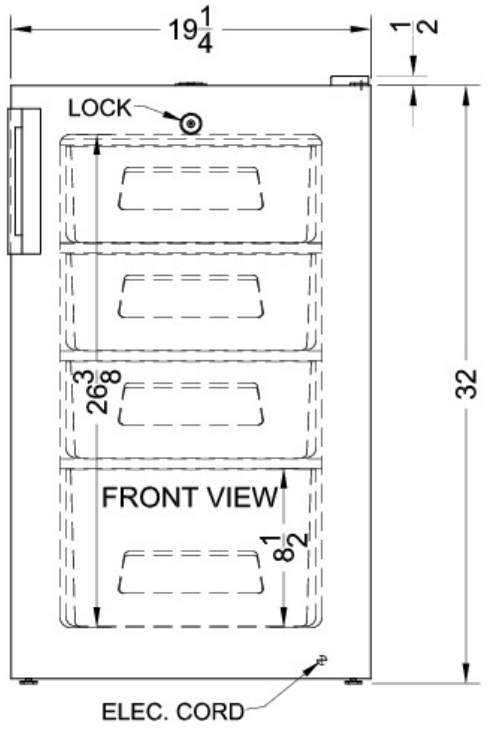
Overview	
Height of Cabinet	32.0" (81 cm)
Height to Hinge Cap	32.5" (83 cm)
Width	19.25" (49 cm)
Depth	21.38" (54 cm)
Depth with Handle	23.0" (58 cm)
Depth with door at 90°	39.5" (100 cm)
Capacity	2.8 cu.ft. (79 L)
Defrost Type	Manual
Door	White
Cabinet	White
US Electrical Safety	ETL
Canadian Electrical Safety	ETL-C
Sanitation	ETL-S
Amps	1.6
Voltage/Frequency	115 V AC/60 Hz
Weight	64.0 lbs. (29 kg)
Shipping Weight	85.0 lbs. (39 kg)
Parts & Labor Warranty	1 Year
Compressor Warranty	5 Years
UPC	761101036601
Freezer	
Door Swing	RHD
Reversible	Factory Reversible
Interior Height	26.38" (67 cm)
Interior Width	14.0" (36 cm)
Interior Depth	16.75" (43 cm)
Thermostat Type	Dial
Refrigerant Type	R134a
Refrigerant Amount	3.0 oz.
High Side PSI	210.0
Low Side PSI	105.0
Level Legs	2
Interior Drawers	Yes
Drawers Qty	4