FS20LFROST

22.25" x 19.75" x 21" (H x W x D)

DISCONTINUED: Replaced by FS22LFROST

Highlights:

Enjoy ice cold aluminum bottled beer stored at approximately 24º F

Precise temperature control with a digital thermostat

Compact "cube" shape fits easily on top of counters

Product Features:

24º F pre-set operation	Ideal temperature to hold aluminum bottled beer just above its freezing point
Digital thermostat	Precise temperature management at the touch of a button
Compact size	20 inch footprint in cube shape fits easily above counters
FROSTED decal	Choose from an English or Spanish decal over the front door
Factory installed lock	Keep contents secure with a front lock on the door
Fully finished white cabinet	Allows the unit to be used freestanding
One piece interior liner	Simple cleanup with a seamless liner that won't hold a mess in hidden crevices
Reversible door	Keep your options flexible with a reversible door that is easy to switch when your arrangement changes
Manual defrost	Energy efficient operation

SUMMIT APPLIANCE DIVISION, FELIX STORCH, INC. | ISO 9001:2015 Certified
770 Garrison Avenue Bronx, NY 10474 USA **TEL** 718-893-3900 **FAX** 844-478-8799 info@summitappliance.com **www.summitappliance.com**

SUMMIT

FS20LFROST Specifications:

Overview	
Height of Cabinet	22.25" (57 cm)
Width	19.75" (50 cm)
Depth	21.0" (53 cm)
Depth with Handle	21.0" (53 cm)
Depth with door at 90°	39.5" (100 cm)
Capacity	1.6 cu.ft. (45 L)
Defrost Type	Manual
Door	Decal
Cabinet	White
US Electrical Safety	UL
Voltage/Frequency	115 V AC/60 Hz
Shipping Weight	55.0 lbs. (25 kg)
Parts & Labor Warranty	1 Year
Compressor Warranty	5 Years
UPC	761101022314
Freezer	
Door Swing	RHD
Reversible	Yes
Interior Height	14.5" (37 cm)
Interior Width	15.5" (39 cm)
Interior Depth	15.0" (38 cm)
Shelf Type	Wire
Shelf Qty	1
Adjustable Shelves	Yes
Thermostat Type	Digital
Refrigerant Type	R134a
Refrigerant Amount	3.17 oz.
High Side PSI	250.0
Low Side PSI	88.0
Level Legs	2
Compressor Step Height	8.5" (22 cm)
Compressor Step Width	15.5" (39 cm)
Compressor Step Depth	7.0" (18 cm)

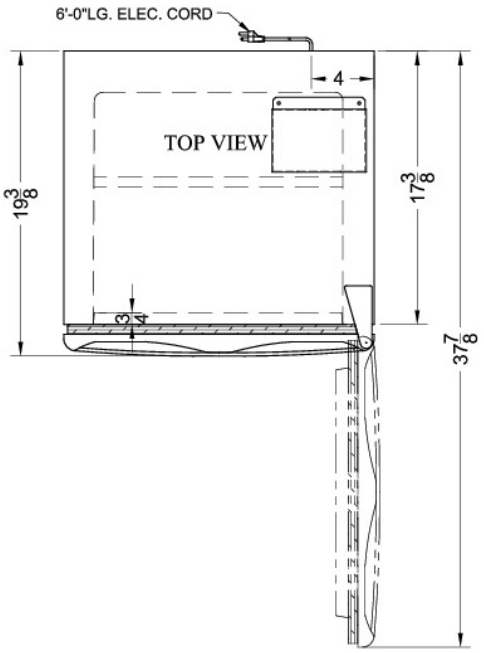

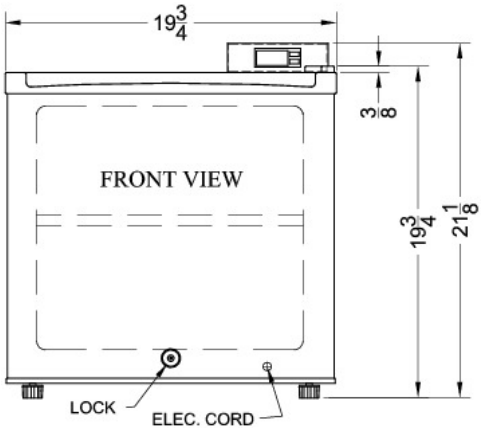

SUMMIT APPLIANCE DIVISION, FELIX STORCH, INC. | ISO 9001:2015 Certified
770 Garrison Avenue Bronx, NY 10474 USA **TEL** 718-893-3900 **FAX** 844-478-8799 info@summitappliance.com **www.summitappliance.com**